ATTACHMENT CATALOGUE

COMPLETE

December 15, 2021

MANITOU GROUP | ATTACHMENTS

HANDLING YOUR WORLD

Founded over 60 years ago by the Braud family, the Manitou Group now operates worldwide. A world-leader in all-terrain material handling, the Group designs, manufactures, distributes and services equipment for construction, agriculture and industries.

The Groups product ranges include: all-terrain fixed, rotating and heavyload telehandlers; all-terrain, semi-industrial and industrial masted forklift trucks; wheel or track skid-steer loaders; articulated loaders; access platforms; truck-mounted forklifts; warehousing equipment; and attachments.

Through its iconic brands - Manitou, Gehl and Mustang by Manitou- and its worldwide network of 1,050 dealers, the Group offers the best solutions to create optimum value for its customers.

Headquartered in France, the Group registered a revenue in 2020 of 1.6 billion euros in 140 countries and employs 4,400 people, all strongly focused on satisfying customers.

3 brands
distributed by
1050 dealers in
140 countries

- 30 subsidiaries
- 9 production sites
- 4,400 employees worldwide
- 65% of the share capital held by the founding families
- 78% of revenue comes from international sales
- 1.6 billion euros of turnover in 2020

MANITOU is pleased to present you this new version of its attachment catalogue. It will give you a complete view on the wide variety of original, homologated attachments offered by Manitou for its telehandlers and forklift trucks.

Being simultaneously a producer of telehandlers and a producer of attachments, Manitou has the technical knowledge, the practical experience and the required facilities to control and ensure perfect efficiency of each attachment + machine pairing.

Manitou applies a demanding internal procedure that leads to the homologation of each attachment + machine pairing. This unique procedure brings guaranteed safety and unbeatable efficiency. Choosing a homologated original Manitou attachment and respecting Manitous compatibilities, you can be sure youll get the best of your machine, making no compromise with safety and staying in line with the European regulation.

We trust youll find everything you need in this catalogue. Should you need something we havent added to our offer yet, do contact your nearest Manitou dealer: our special solution department will certainly be able to craft the right tailor-made solution for you!

All attachments capacities given in this document are nominal capacities:

- Bucket capacities are calculated according to the ISO 7546 norm: they correspond to the heaped bucket capacity in m3 calculated according to the norm
- Grab bucket capacities given are total capacities with closed grab (in m3)
- Concrete mixing bucket, silage facing bucket, feeding bucket, shear grab & shear bucket as well as concrete & crane skip capacities are given in l and calculated to guarantee a good efficiency of all functions (no struck capacities)
- Sweeper capacities are max. dirt container capacities
- Platform capacities are given in kg INCLUDING 2 or 3 people (according to platform type)
- All other capacities are SWL (Safe Working Load) - in kg
- All compatibilities are given for the machines available for sales when this guide was issued. For machines produced earlier please contact your Manitou dealer.

Compatibility

Having legibility in mind we have simplified the list of machines in this guide. It should be read as follows:

- All compatibilities are given for the machines present in Manitous offer on the guides issuing day.
- For older machines please contact your Manitou dealer.
- A machine type is mentioned for both its "Non-X" (Region 1) and "X" version (Region 2), unless otherwise stated.
  => For Example:
  "MHT 10230" stands for the MHT 10230 (Region 1) and the MHT-X 10230 (Region 2).

- A machine type stands for all the existing versions, unless otherwise stated.
  => For example:
  "MT 1840" stands for the MT 1840, MT-X 1840, MT 1840 A, MT-X 1840 A and MT 1840 HA.

Material densities weights

Material	kg/m3	Material	kg/m3
Apples	525	Manure (farmyard)	922
Ashes	604	Nitrate fertiliser	1250
Barley	600	Oats	415
Beet pulp (nuts)	604	Onions	556
Beet pulp (pressed)	906	Peat (dry)	400
Brewers grain	1110	Petroleum coke	680
Brick aggregate	1828	Potatoes	699
Carrots	636	Refuse (town)	318
Cement (natural)	874	Rubble	1047
Cement (Portland)	1440	Sand (dry)	1550
Chalk	795	Sand (wet)	1890
Clay (fine)	2080	Sawdust	238
Clay (wet)	1680	Silage (ensile)	747
Coal (anthracite)	1046	Silage (green)	349
Coal (bitumous)	765	Slurry	1780
Coke (loose)	570	Snow (fresh)	200
Earth (dry)	1150	Snow (wet)	400
Fertiliser (mixed)	1030	Sodium chloride (dry salt)	1300
Flour	445	Straw (high density bale)	254
Gravel (dry)	1650	Sugar beet	530
Hay (normal density bale)	190	Turnips	540
Lime (quick)	881	Wheat	730
Limestone (crushed)	1530		

ATTACHMENT CATALOGUE

SUMMARY

BUCKETS
Page 8

CLAMPS
Page 100

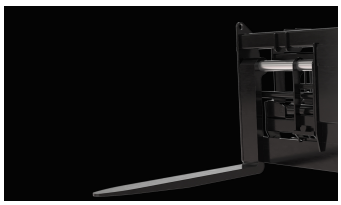

ON FORK HANDLING SOLUTIONS
Page 130

FORKS & GRABS
Page 163

JIBS
Page 182

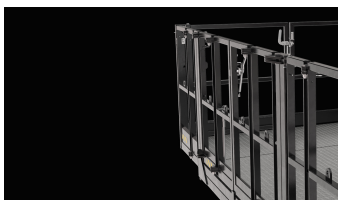

PLATFORM
Page 210

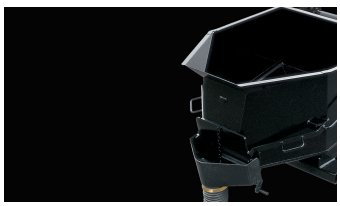

SKIP
Page 251

SWEEPER & CLEANER
Page 258

WINCH RANGE
Page 273

MINING SOLUTIONS
Page 283

EARTH DRILLING AND DIGGING SOLUTIONS
Page 297

SNOW REMOVING SOLUTIONS
Page 300

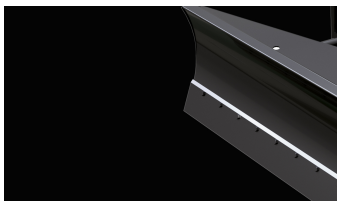

LEVELLING SOLUTIONS
Page 306

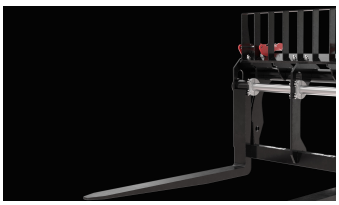

BACKREST, CARRIAGE, INTERFACE REFERENCES
Page 314

MISCELLANEOUS ATTACHMENTS
Page 317

INDEX

BUCKETS

9 Agricultural Bucket
13 Agricultural Multifunction Grab Bucket - FO
16 Agricultural Multifunction Grab Bucket - WE
19 Bucket 4 in 1
22 Bucket 4 in 1 (Compact machines)
26 Bucket 4 in 1 with Teeth (Compact machines)
30 Concrete Mixing Bucket
32 Construction Bucket
35 Environment Bucket
37 Environment Grab Bucket
39 General Purpose Bucket
42 General Purpose Bucket (MHT)
44 General Purpose Bucket (MRT)
46 General Purpose Bucket Essential NEW
49 General Purpose Bucket UK NEW
51 Grapple Bucket (Compact machines)
54 Hd Demolition and Ship Trimming Bucket (Compact machines)
57 High Capacity Agricultural Bucket
59 High Capacity Agricultural Grab Bucket
61 High Tip Bucket (Compact machines)
63 Industrial Grapple Bucket (Compact machines)
66 Light Material Bucket (Compact machines)
71 Light Material Bucket (MHT)
73 Light Material Bucket (MRT)
75 Light Material Bucket with Wear Plate (Compact machines)
77 Shear buckets
79 Silage Facing Bucket
81 Standard Digging Bucket (Compact machines)
87 Standard Digging Bucket with Teeth (Compact machines)
93 Standard Digging Bucket with Wear Plate (Compact machines)
95 Sugar Beet Bucket
97 Utility Bucket (Compact machines)

CLAMPS

101 Bale clamp classic
104 Bale clamp high intensive NEW
106 Bale Clamp Intensive
108 Bale Clamp Super Compact
110 Mixed Bale Clamp
112 Pot clamp
114 Pot Clamp (Compact machines)
116 Rib handling clamp
118 Round Bale Clamp (Compact machines)
120 Square Bale Clamp
122 Square wrapped bale clamp
124 Square wrapped bale clamp (Compact machines)
126 Wrapped Bale Clamp
128 Wrapped Bale Clamp (Compact machines)

ON FORK HANDLING SOLUTIONS

131 360° Rotating Fork Carriage
133 Competitive Carriage Interface
135 Floating Fork Carriage with Hydraulic Leveling
138 Floating Forks Carriage
140 Heavy Duty Floating Fork Positioners
142 Hydraulic Floating Fork Positioner
144 Pallet Forks Carriage (Compact machines)
147 Tilting & Slewing Forks Carriage
149 Tilting Fork Carriage (MRT - MHT) NEW
155 Tilting Fork Carriage With Side Shift (MRT - MHT) NEW
159 Tilting Forks Carriage

FORKS & GRABS

164 Bale Forks (Compact machines)
166 High Capacity Silage & Manure Grab
168 Manure Fork (Compact machines)
172 Manure Fork With Grapple
174 Manure Fork With Grapple (Compact machines)
178 Shear Grab
180 Square Bale Forks

INDEX

JIBS

183 2-Hook Jib
186 3-Hook Jib
188 Big Bag Handler
192 Extensible Jib
194 Extensible jib with winch
196 Extension Jib
199 Extension Jib with winch
203 Frame Mounted Hook
206 Heavy Duty Frame Mounted Hook
208 Swing Jib

PLATFORM

211 Aerial Jib 1
213 Aerial Jib 2
216 Alureach Platform
218 Deep Extensible Platform
221 Extensible Platform
225 Fast Opening Platform
230 Fixed Slewing Roofer Platform
233 Platform
236 Platform with dismountable fops roof
239 Platform with Winch
242 Raised Extensible Platform
245 Roofer Platform
248 System 3D

SKIP

252 Concrete Skip
255 Crane Skip

SWEEPER & CLEANER

259 Angle Broom (Compact machines)
261 Broom Bucket (Compact machines)
264 Farm Yard Scraper (Compact machines)
266 High pressure cleaner
268 Pickup Sweeper
270 Sweeper 2 in 1

WINCH RANGE

274 Heavy Duty Hydraulic Winch
276 Hydraulic Winch
280 Variowinch

MINING SOLUTIONS

284 Cylinder Handler
286 Pipe Handler
288 Slim Tyre Handler
290 Tunneling Platform
293 Tyre Handler
295 Underground Mining Platform

EARTH DRILLING AND DIGGING SOLUTIONS

298 Hydraulic hammer (Compact machines)

SNOW REMOVING SOLUTIONS

301 Snow blade (Compact machines)
304 Snow blower (Compact machines)

LEVELLING SOLUTIONS

307 Dozer Blade (Compact machines)
309 Dozer Blade - Hydraulic (Compact machines)
312 Dozer Blade - Manual (Compact machines)

BACKREST, CARRIAGE, INTERFACE REFERENCES

315 Carriage Floating - Forks NEW

MISCELLANEOUS ATTACHMENTS

318 Material Basket NEW

BUCKETS

Range

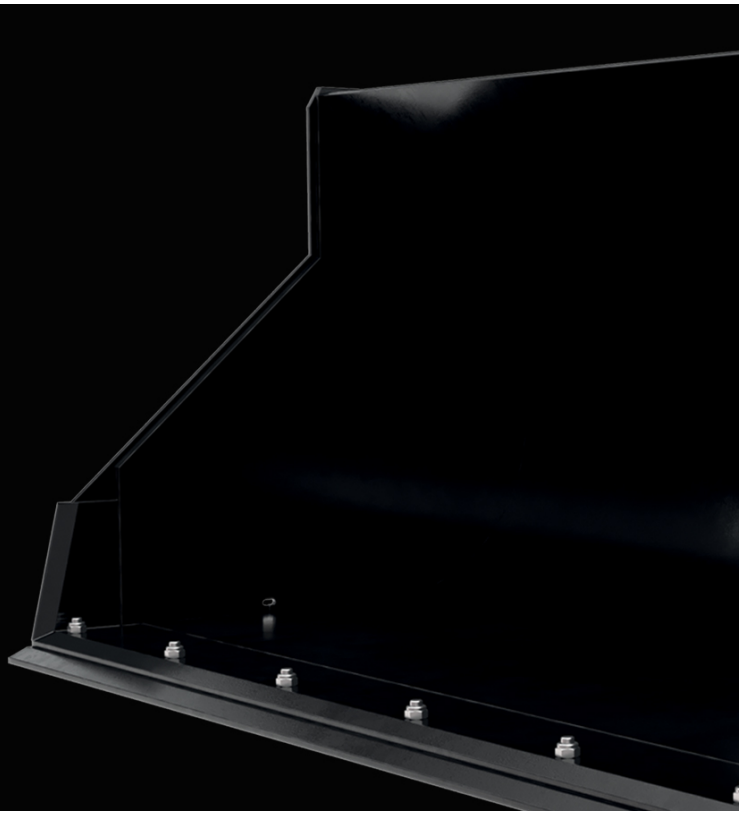

9 Agricultural Bucket
13 Agricultural Multifunction Grab Bucket - FO
16 Agricultural Multifunction Grab Bucket - WE
19 Bucket 4 in 1
22 Bucket 4 in 1 (Compact machines)
26 Bucket 4 in 1 with Teeth (Compact machines)
30 Concrete Mixing Bucket
32 Construction Bucket
35 Environment Bucket
37 Environment Grab Bucket
39 General Purpose Bucket
42 General Purpose Bucket (MHT)
44 General Purpose Bucket (MRT)
46 General Purpose Bucket Essential NEW
49 General Purpose Bucket UK NEW
51 Grapple Bucket (Compact machines)
54 Hd Demolition and Ship Trimming Bucket (Compact machines)
57 High Capacity Agricultural Bucket
59 High Capacity Agricultural Grab Bucket
61 High Tip Bucket (Compact machines)
63 Industrial Grapple Bucket (Compact machines)
66 Light Material Bucket (Compact machines)
71 Light Material Bucket (MHT)
73 Light Material Bucket (MRT)
75 Light Material Bucket with Wear Plate (Compact machines)
77 Shear buckets
79 Silage Facing Bucket
81 Standard Digging Bucket (Compact machines)
87 Standard Digging Bucket with Teeth (Compact machines)
93 Standard Digging Bucket with Wear Plate (Compact machines)
95 Sugar Beet Bucket
97 Utility Bucket (Compact machines)

AGRICULTURAL BUCKET

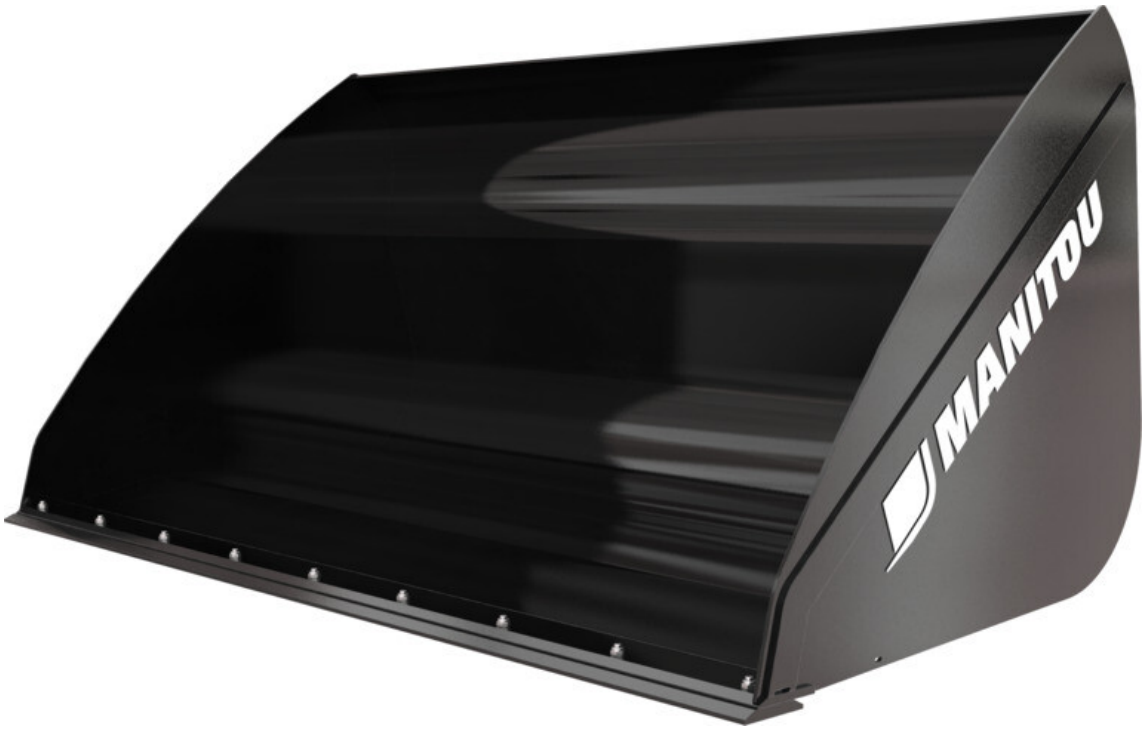

- Wide range of bucket capacity from 1500 L to 3000 L.
- Light material bucket suitable for handling materials with a density ≤ 1.
- Reinforced structure (base, blade and sides).
- "DA" = tip angle increased of 10°.
- Optional: 500 HB reversible wear plate.
- Note: road circulation kit mandatory in Italy. Contact your dealer.
- MRT: only for deconstruction applications. MRTs are not designed for intensive loading applications.
- Daily use and hard working bucket.
- Ideal bucket for bulk products (cereals, woodchip, mineral feed etc.).
- Durable and resistant bucket.
- Improved shape designed for quick loading and unloading operation.
- More longevity of the wear plate.

	CBA 1500 / 2050	CBA 1500 / 2050 DA	CBA 1500 / 2450	CBA 2000 / 2450	CBA 3000 / 2500
Heaped Capacity (l)	1500	1500	1529	2020	3023
Struck capacity (l)	1101	1101	1101	1484	2342
Overall height (mm)	1082	1082	997	1150	1314
Width (mm)	2050	2050	2450	2450	2500
Length (mm)	1231	1231	1170	1204	1504
Overall weight (kg)	509	509	500	567	760
Machine Equipement	×	×	×	×	×
Bolted wearplate (LDR)	-	Not Standard	Not Standard	Not Standard	-
Wear plate hardness	-	-	500	500	-

Machines compatibility					
Reference number	**570546**	**653035**	**570547**	**570551**	**570555**
Reference number with bolted wearplate (WP)	**-**	**52000489**	**570548**	**570552**	**500701**
MLA-T 533-145 V+ - ST5	-	-	X	-	-
MLT 625-75 H	X	X	-	-	-
MLT 630-105 ST4	-	-	-	X	-
MLT 630-105 V CP ST4	-	-	-	X	-
MLT 630-105 V ST4	-	-	-	X	-
MLT 630-115	-	-	-	X	-
MLT 630-115 V	-	-	-	X	-
MLT 630-115 V CP	-	-	-	X	-
MLT 730-115 V	-	-	-	X	-
MLT 730-115 V CP	-	-	-	X	-
MLT 730-115 V CP ST4	-	-	-	X	-
MLT 733-115	-	-	X	X	-
MLT 733-115 LSU	-	-	X	X	-
MLT 733-115 ST4	-	-	X	X	-
MLT 737-130 PS+	-	-	X	X	-
MLT 737-130 PS+ ST4	-	-	X	X	-
MLT 741-130 PS+	-	-	X	X	-
MLT 741-140 V+	-	-	X	X	-
MLT 840-145 PS+	-	-	-	X	X
MLT 841-145 PS+	-	-	-	X	X
MLT 845-100 H	-	-	X	X	X
MLT 845-120	-	-	X	X	X
MLT 1040-145 PS+ L	-	-	-	X	X
MLT 1041-145 PS+L	-	-	-	X	X
MLT-X 625-75 H	X	X	-	-	-
MLT-X 732	-	-	X	X	-
MLT-X 735 T LSU	-	-	X	X	-
MLT-X 737-130 PS+	-	-	X	X	-
MLT-X 741-140 V+	-	-	X	X	-
MLT-X 840-140 PS+	-	-	-	X	X
MLT-X 841 - 145 PS+	-	-	-	X	X
MLT-X 845-120	-	-	X	X	X
MLT-X 845-120 H	-	-	X	X	X

	CBA 1500 / 2050	CBA 1500 / 2050 DA	CBA 1500 / 2450	CBA 2000 / 2450	CBA 3000 / 2500
Machines compatibility					
MLT-X 1040-140 PS+ L	-	-	-	X	X
MLT-X 1041-145 PS+L	-	-	-	X	X

MANDATORY MACHINE EQUIPMENT:

	CBA 4000 / 2500 LDR	CBA 1700L / 2100	CBA 2000L / 2250	CBA 2500L / 2450
Heaped Capacity (l)	4078	1703	1970	2526
Struck capacity (l)	3147	1271	1456	1916
Overall height (mm)	1527	1103	1137	1250
Width (mm)	2500	2100	2250	2450
Length (mm)	2075	1314	1422	1368
Overall weight (kg)	1035	522	650	682
Machine Equipement	X	X	X	X
Bolted wearplate (LDR)	-	Not Standard	Not Standard	-
Wear plate hardness	-	-	500	-

Machines compatibility				
Reference number	**-**	**570549**	**790540**	**570553**
Reference number with bolted wearplate (WP)	**-**	**52610570**	**790541**	**570554**
MHT 790	X	-	-	-
MHT-X 790	X	-	-	-
MLT 630-105 ST4	-	X	X	-
MLT 630-105 V CP ST4	-	X	X	-
MLT 630-105 V ST4	-	X	X	-
MLT 730-115 V CP ST4	-	X	X	-
MLT 733-115 ST4	-	-	-	X
MLT 737-130 PS+ ST4	-	-	-	X
MLT 840-145 PS+	-	-	-	X
MLT 841-145 PS+	-	-	-	X
MLT 845-100 H	-	-	-	X
MLT 845-120	-	-	-	X
MLT 1040-145 PS+ L	-	-	-	X
MLT 1041-145 PS+L	-	-	-	X
MLT-X 735 T LSU	-	-	-	X
MLT-X 737-130 PS+	-	-	-	X
MLT-X 840-140 PS+	-	-	-	X
MLT-X 841 - 145 PS+	-	-	-	X
MLT-X 845-120	-	-	-	X
MLT-X 845-120 H	-	-	-	X
MLT-X 1040-140 PS+ L	-	-	-	X
MLT-X 1041-145 PS+L	-	-	-	X

MANDATORY MACHINE EQUIPMENT: X

AGRICULTURAL MULTIFUNCTION GRAB BUCKET - FO

- Forged teeth -FO.
- Handling materials with a density ≤ 1000 kg/m3.
- Dismountable sides, spill guard and 500 HB bolt-on cutting edge standard.
- Reinforced construction (base, blade and grab).
- Nitritized cylinders, all pins with "construction type" mounting.
- Robust and versatile bucket suitable for diary use and different AG applications.
- Complete opening >90° and powerful jaw allows working flush with walls.
- Perfect for handling wet manure, silage…
- Must-have tool for livestock farm.

	BG 1850 / 1050 FO	BG 2100 / 1200 FO	BG 2300 / 1350 FO	BG 2450 / 1400 FO	BG 2450 / 1700 FO
Heaped Capacity (l)	1059	1200	1335	1426	1695
Struck capacity (l)	650	740	813	868	1150
Opened grab height (mm)	1675	1675	1675	1675	1886
Closed grab height (mm)	1033	1033	1031	1033	1124
Width (mm)	1850	2100	2300	2450	2450
Length (mm)	1263	1256	1256	1256	1179
Overall weight (kg)	636	720	763	803	870
Machine Equipement					
Teeth / Fingers	7	8	9	10	11 / 4
Fork spread minimum (mm)	265	263	254	243	-
Fork spread maximum (mm)	265	263	254	243	-
Bolted wearplate (LDR)	Standard	Standard	Standard	Standard	Standard
Wear plate hardness	500	500	500	500	500

Machines compatibility					
Reference number	**52647327**	**52647329**	**52647331**	**52647333**	**52549810**
MLT 625-75 H	X	-	-	-	-
MLT 630-105 ST4	-	X	X	X	X
MLT 630-105 V CP ST4	-	X	X	X	X
MLT 630-105 V ST4	-	X	X	X	X
MLT 630-115	-	X	X	X	X
MLT 630-115 V	-	X	X	X	X
MLT 630-115 V CP	-	X	X	X	X
MLT 730-115 V	-	X	X	X	X
MLT 730-115 V CP	-	X	X	X	X
MLT 730-115 V CP ST4	-	X	X	X	X
MLT 733-115	-	-	-	X	X
MLT 733-115 LSU	-	-	-	X	X
MLT 733-115 ST4	-	-	-	X	X
MLT 737-130 PS+	-	-	-	X	X
MLT 737-130 PS+ ST4	-	-	-	X	X
MLT 741-130 PS+	-	-	-	X	X
MLT 741-140 V+	-	-	-	X	X
MLT 840-145 PS+	-	-	-	X	X
MLT 841-145 PS+	-	-	-	X	X
MLT 845-100 H	-	-	-	X	X
MLT 845-120	-	-	-	X	X
MLT 1040-145 PS+ L	-	-	-	X	X
MLT 1041-145 PS+L	-	-	-	X	X
MLT-X 625-75 H	X	-	-	-	-
MLT-X 732	-	-	-	X	-
MLT-X 735 T LSU	-	-	-	X	X
MLT-X 737-130 PS+	-	-	-	X	X
MLT-X 741-140 V+	-	-	-	X	X
MLT-X 840-140 PS+	-	-	-	X	X
MLT-X 841 - 145 PS+	-	-	-	X	X

	BG 1850 / 1050 FO	BG 2100 / 1200 FO	BG 2300 / 1350 FO	BG 2450 / 1400 FO	BG 2450 / 1700 FO
Machines compatibility					
MLT-X 1040-140 PS+ L	-	-	-	X	X
MLT-X 1041-145 PS+L	-	-	-	X	X

MANDATORY MACHINE EQUIPMENT:

AGRICULTURAL MULTIFUNCTION GRAB BUCKET - WE

- Welded teeth -MS.
- Handling materials with a density ≤ 1000kg/m3.
- Dismountable sides, spill guard and 500HB bolt-on cutting edge standard.
- Reinforced construction (base, blade and grab).
- Nitritized cylinders, all pins with "construction type" mounting.
- Robust and versatile bucket suitable for diary use and different AG applications.
- Complete opening>90° and powerful jaw allows working flush with walls.
- Perfect for handling wet manure, silage….
- Must-have tool for livestock farm.

	BG 1850 / 1050 DA WE	BG 2100 / 1200 WE	BG 2300 / 1350 WE	BG 2450 / 1400 WE	BG 2450 / 1700 WE
Heaped Capacity (l)	1059	1200	1335	1426	1695
Struck capacity (l)	650	740	813	868	1150
Opened grab height (mm)	1776	1776	1776	1776	1979
Closed grab height (mm)	1033	1032	1031	1033	1124
Width (mm)	1850	2100	2300	2450	2450
Length (mm)	1288	1280	1280	1280	1370
Depth (mm)	1020	941	941	941	1021
Overall weight (kg)	696	745	785	813	895
Machine Equipement					
Teeth / Fingers	7 / 2	8 / 2	8 / 2	8 / 2	9 / 2
Fork spread minimum (mm)	285	280	308.80	330.30	-
Fork spread maximum (mm)	285	280	308.80	330.30	-
Bolted wearplate (LDR)	Standard	Standard	Standard	Standard	Standard
Wear plate hardness	500	500	500	500	500

Machines compatibility					
Reference number	52647326	52647328	52647330	52647332	52549720
MLT 625-75 H	X	-	-	-	-
MLT 630-105 ST4	-	X	X	X	-
MLT 630-105 V CP ST4	-	X	X	X	-
MLT 630-105 V ST4	-	X	X	X	-
MLT 630-115	-	X	X	X	-
MLT 630-115 V	-	X	X	X	-
MLT 630-115 V CP	-	X	X	X	-
MLT 730-115 V	-	X	X	X	-
MLT 730-115 V CP	-	X	X	X	-
MLT 730-115 V CP ST4	-	X	X	X	-
MLT 733-115	-	-	-	X	X
MLT 733-115 LSU	-	-	-	X	X
MLT 733-115 ST4	-	-	-	X	X
MLT 737-130 PS+	-	-	-	X	X
MLT 737-130 PS+ ST4	-	-	-	X	X
MLT 840-145 PS+	-	-	-	X	X
MLT 841-145 PS+	-	-	-	X	X
MLT 845-100 H	-	-	-	X	X
MLT 845-120	-	-	-	X	X
MLT 1040-145 PS+ L	-	-	-	X	X
MLT 1041-145 PS+L	-	-	-	X	X
MLT-X 625-75 H	X	-	-	-	-
MLT-X 732	-	-	-	X	-
MLT-X 735 T LSU	-	-	-	X	X
MLT-X 737-130 PS+	-	-	-	X	X
MLT-X 840-140 PS+	-	-	-	X	X
MLT-X 841 - 145 PS+	-	-	-	X	X
MLT-X 845-120	-	-	-	X	X
MLT-X 845-120 H	-	-	-	X	X

	BG 1850 / 1050 DA WE	BG 2100 / 1200 WE	BG 2300 / 1350 WE	BG 2450 / 1400 WE	BG 2450 / 1700 WE
Machines compatibility					
MLT-X 1040-140 PS+ L	-	-	-	X	X
MLT-X 1041-145 PS+L	-	-	-	X	X

MANDATORY MACHINE EQUIPMENT:

BUCKET 4 IN 1

- 4 in 1 bucket suitable for handling materials with a density ≤ 2,1.
- Rear bolted counter blade dedicated to levelling.
- Claws fitted on the mobile part's back side help handling cylindrical objects such as poles, tubes etc.
- Reinforced structure (base, blade and sides).
- Reversible teeth.
- Versatile and very robust bucket.
- Time-saving attachment is a real swiss knife.
- Designed for executing different works :

-> Loading and unloading operations

-> Pushing materials

-> Levelling grounds

-> Backfilling trenches

-> Object clamping

	CB4x1 400L / 1500	CB4x1 700L / 1950	CB4x1 850L / 2300	CB4x1 900L / 2450
Heaped Capacity (l)	402	700	850	899
Struck capacity (l)	313	524	628	672
Overall height (mm)	890	890	890	890
Width (mm)	1525	1950	2300	2450
Length (mm)	1106	1107	1107	1110
Depth (mm)	1002	887	887	889
Overall weight (kg)	540	640	735	765
Machine Equipement				
Teeth	4	5	6	7
Opening minimum (mm)	0.98	-	-	-

Machines compatibility				
Reference number	**52551750**	**751402**	**751401**	**751465**
Reference number TSDL	**-**	**-**	**52000367**	**52000368**
MLT 625-75 H	-	X	-	-
MLT 733-115	-	-	-	X
MLT 733-115 LSU	-	-	-	X
MLT 733-115 ST4	-	-	-	X
MLT 737-130 PS+	-	-	-	X
MLT 737-130 PS+ ST4	-	-	-	X
MLT 840-145 PS+	-	-	-	X
MLT 841-145 PS+	-	-	-	X
MLT 845-100 H	-	-	X	X
MLT 845-120	-	-	X	X
MLT 1041-145 PS+L	-	-	-	X
MLT-X 625-75 H	-	X	-	-
MLT-X 735 T LSU	-	-	-	X
MLT-X 737-130 PS+	-	-	-	X
MLT-X 840-140 PS+	-	-	-	X
MLT-X 841 - 145 PS+	-	-	-	X
MLT-X 845-120	-	-	X	X
MLT-X 845-120 H	-	-	X	X
MLT-X 1041-145 PS+L	-	-	-	X
MT 420 H	X	-	-	-
MT 625 HA	-	X	-	-
MT 733 Easy	-	-	-	X
MT 933 Easy	-	-	-	X
MT 1135	-	-	-	X
MT 1135 easy ST5	-	-	-	X
MT 1135 H easy ST5	-	-	-	X
MT 1135 HA Easy ST5	-	-	-	X
MT 1335	-	-	-	X
MT 1335 easy ST5	-	-	-	X
MT 1335 H easy ST5	-	-	-	X
MT 1440	-	-	X	X
MT 1440 A	-	-	X	X

	CB4x1 400L / 1500	CB4x1 700L / 1950	CB4x1 850L / 2300	CB4x1 900L / 2450
Machines compatibility				
MT 1440 easy ST5	-	-	-	X
MT 1440 HA	-	-	X	X
MT 1840	-	-	X	X
MT 1840 A	-	-	X	X
MT 1840 easy ST5	-	-	-	X
MT 1840 HA	-	-	X	X
MT-X 420 H	X	-	-	-
MT-X 625 H	-	X	-	-
MT-X 733	-	-	-	X
MT-X 1440	-	-	X	X
MT-X 1440 A	-	-	X	X
MT-X 1840	-	-	X	X
MT-X 1840 A	-	-	X	X

MANDATORY MACHINE EQUIPMENT:

BUCKET 4 IN 1 (COMPACT MACHINES)

- Increased component protection.
- 400HB cutting edge & 400HB side blades for more resistance.
- Designed for all construction applications.
- All-purpose attachment: handles bulk material, pushes, grabs etc.

	B4x1 920 / 170	B4x1 1080 / 170	B4x1 1080 / 210	B4x1 1380 / 270	B4x1 1380 / 300	B4x1 1520 / 330	B4x1 1525 / 360	B4x1 1550 / 340
Heaped Capacity (l)	170	170	210	270	300	330	360	340
Overall height (mm)	713	713	713	713	721	721	721	721
Width (mm)	920	1080	1080	1380	1380	1520	1525	1550
Depth (mm)	671	770	671	770	730	730	730	730
Overall weight (kg)	170	180	180	212	250	253	280	260
Flexible tube	No	No	No	No	No	No	No	No

Machines compatibility								
All-Tach® Narrow	**N004044**	**N51502388**	**-**	**N004046**	**-**	**-**	**-**	**-**
All-Tach®	**N726014**	**-**	**N726016**	**-**	**N736018**	**N736019**	**N004047**	**N736067**
4 point Carriage	**N51502389**	**-**	**-**	**N51502391**	**-**	**-**	**N51502395**	**-**
Euro Carriage	**-**	**-**	**-**	**N51502134**	**-**	**-**	**N51502169**	**-**
850 R	X	-	X	-	-	-	-	-
1050 R	-	-	-	-	X	-	-	-
1350 R NXT2	-	-	-	-	X	X	-	X
1350 RT	-	-	-	-	X	X	-	X
AL140	X	-	-	-	-	-	-	-
MLA 1-25 H	X	X	-	-	-	-	-	-
MLA 3-35 H	-	-	-	X	-	-	-	-
MLA 4-50 H	-	-	-	-	-	-	X	-

MANDATORY MACHINE EQUIPMENT:

	B4x1 1650 / 610	B4x1 1680 / 370	B4x1 1680 / 430	B4x1 1760 / 420	B4x1 1760 / 450	B4x1 1800 / 670	B4x1 1830 / 450 (a)
Heaped Capacity (l)	610	370	430	420	450	670	450
Overall height (mm)	863	721	767	767	767	863	767
Width (mm)	1650	1680	1680	1760	1760	1800	1830
Depth (mm)	833	730	786	800	786	833	880
Overall weight (kg)	470	328	350	385	410	500	420
Flexible tube	No	No	No	No	No	No	No

Machines compatibility							
All-Tach® Narrow	-	-	-	-	-	-	-
All-Tach®	N51502529	N747018	N51502041	N51502476	N51502042	N51502528	N757024
4 point Carriage	N51502589	-	-	-	-	N51502591	-
Euro Carriage	N51502548	-	-	-	-	N51502550	-
1500 R NXT2	-	X	-	-	-	-	-
1650 R	-	X	-	-	-	-	-
1750 RT NXT:3	-	-	X	-	X	-	-
1900 R	-	X	-	-	-	-	-
2200 R	-	-	-	X	-	-	-
2700 V NXT:2	-	-	-	-	-	-	X
3300 V NXT:2	-	-	-	-	-	-	X
MLA 6-65 H-Z	X	-	-	-	-	X	-
MLA 7-75 H-Z	X	-	-	-	-	X	-

MANDATORY MACHINE EQUIPMENT:

	B4x1 1830 / 450 (b)	B4x1 1850 / 480	B4x1 1880 / 480	B4x1 1950 / 720	B4x1 2140 / 560 (a)	B4x1 2140 / 560 (b)	B4x1 2150 / 800
Heaped Capacity (l)	450	480	480	720	560	560	820
Overall height (mm)	767	767	767	863	767	767	863
Width (mm)	1830	1850	1880	1950	2140	2140	2150
Depth (mm)	800	786	786	833	786	786	833
Overall weight (kg)	420	420	420	525	475	475	565
Flexible tube	No	No	No	No	No	No	No

Machines compatibility							
All-Tach® Narrow	-	-	-	-	-	-	-
All-Tach®	N51502478	N51502043	N51502082	N51502527	N700255	N51502044	N51502526
4 point Carriage	-	-	-	N51502593	-	-	N51502595
Euro Carriage	-	-	-	N51502552	-	-	N51502554
1750 RT NXT:3	-	X	-	-	-	-	-
2100 RT NXT:3	-	X	-	-	-	X	-
2200 R	X	-	-	-	-	-	-
2600 R	X	-	X	-	-	-	-
2700 V NXT:2	-	-	X	-	-	-	-
3300 V NXT:2	-	-	X	-	X	-	-
4200 V	-	-	X	-	X	-	-
MLA 6-65 H-Z	-	-	-	X	-	-	X
MLA 7-75 H-Z	-	-	-	X	-	-	X

MANDATORY MACHINE EQUIPMENT:

BUCKET 4 IN 1 WITH TEETH (COMPACT MACHINES)

- HD bolted teeth for more digging efficiency.
- 400HB cutting edge & 400HB side blades for more resistance.
- Designed for all construction applications.
- All-purpose attachment: handles bulk material, pushes, grabs etc.

	B4x1 920 / 170 T (a)	B4x1 1080 / 210 T	B4x1 1380 / 270 T	B4x1 1380 / 300 T	B4x1 1520 / 330 T	B4x1 1550 / 340 T	B4x1 1650 / 610 T
Heaped Capacity (l)	170	210	270	300	330	340	610
Overall height (mm)	713	713	713	721	721	721	863
Width (mm)	920	1080	1380	1380	1520	1550	1650
Depth (mm)	870	671	870	730	730	730	933
Overall weight (kg)	175	180	219	250	253	260	482
Teeth	5	6	7	7	7	7	8
Flexible tube	No	No	No	No	No	No	No

Machines compatibility							
All-Tach® Narrow	**N004068**	**-**	**N004070**	**-**	**-**	**-**	**-**
All-Tach®	**-**	**N726017**	**-**	**N736020**	**N736021**	**N736068**	**N51502525**
4 point Carriage	**N51502392**	**-**	**N51502394**	**-**	**-**	**-**	**N51502590**
Euro Carriage	**-**	**-**	**N51502137**	**-**	**-**	**-**	**N51502549**
850 R	-	X	-	-	-	-	-
1050 R	-	-	-	X	-	-	-
1350 R NXT2	-	-	-	X	X	X	-
1350 RT	-	-	-	X	X	X	-
AL140	X	-	-	-	-	-	-
MLA 1-25 H	X	-	-	-	-	-	-
MLA 3-35 H	-	-	X	-	-	-	-
MLA 6-65 H-Z	-	-	-	-	-	-	X
MLA 7-75 H-Z	-	-	-	-	-	-	X

MANDATORY MACHINE EQUIPMENT:

	B4x1 1680 / 370 T	B4x1 1680 / 430 T	B4x1 1760 / 420 T	B4x1 1760 / 450 T	B4x1 1800 / 670 T	B4x1 1830 / 450 T (a)	B4x1 1830 / 450 T (b)
Heaped Capacity (l)	370	430	420	450	670	450	450
Overall height (mm)	721	767	767	767	863	767	767
Width (mm)	1680	1680	1760	1760	1800	1830	1830
Depth (mm)	730	786	800	786	933	800	800
Overall weight (kg)	328	350	385	410	514	420	420
Teeth	8	8	8	8	9	9	9
Flexible tube	No	No	No	No	No	No	No

Machines compatibility							
All-Tach® Narrow	-	-	-	-	-	-	-
All-Tach®	N747019	N51502045	N51502477	N51502046	N51502524	N757025	N51502479
4 point Carriage	-	-	-	-	N51502592	-	-
Euro Carriage	-	-	-	-	N51502551	-	-
1500 R NXT2	X	-	-	-	-	-	-
1650 R	X	-	-	-	-	-	-
1750 RT NXT:3	-	X	-	X	-	-	-
1900 R	X	-	-	-	-	-	-
2200 R	-	-	X	-	-	-	X
2600 R	-	-	-	-	-	-	X
2700 V NXT:2	-	-	-	-	-	X	-
3300 V NXT:2	-	-	-	-	-	X	-
MLA 6-65 H-Z	-	-	-	-	X	-	-
MLA 7-75 H-Z	-	-	-	-	X	-	-

MANDATORY MACHINE EQUIPMENT:

	B4x1 1850 / 480 T	B4x1 1880 / 480 T	B4x1 1950 / 720 T	B4x1 2140 / 560 T (a)	B4x1 2140 / 560 T (b)	B4x1 2150 / 800 T
Heaped Capacity (l)	480	480	720	560	560	820
Overall height (mm)	767	767	863	767	767	863
Width (mm)	1850	1880	1950	2140	2140	2150
Depth (mm)	786	786	933	786	786	933
Overall weight (kg)	420	420	540	475	475	572
Teeth	9	9	10	11	11	11
Flexible tube	No	No	No	No	No	No

Machines compatibility						
All-Tach® Narrow	-	-	-	-	-	-
All-Tach®	N51502047	N51502083	N51502523	N700256	N51502048	N51502522
4 point Carriage	-	-	N51502594	-	-	N51502596
Euro Carriage	-	-	N51502553	-	-	N51502555
1750 RT NXT:3	X	-	-	-	-	-
2100 RT NXT:3	X	-	-	-	X	-
2200 R	-	X	-	-	-	-
2600 R	-	X	-	-	-	-
2700 V NXT:2	-	X	-	-	-	-
3300 V NXT:2	-	X	-	X	-	-
4200 V	-	-	-	X	-	-
MLA 6-65 H-Z	-	-	X	-	-	-
MLA 7-75 H-Z	-	-	X	-	-	X

MANDATORY MACHINE EQUIPMENT:

CONCRETE MIXING BUCKET

- Capacity 500 L.
- Bolt-on mixing blades in abrasion-resistant steel.
- Equiped with a electric cable reel: can work even with the machine without an electric plug on the boom head.
- 1.5 m flexible tube (standard) for better unloading control.
- Lateral distribution controlled hydraulically, that ensures maximum users safety.
- Durable bucket designed for an intensive use.
- Bag openers on the cover.
- A mixture ready to use in 3 minutes.
- Adapted to dry mixtures.
- Replaceable mixing blades for low running costs.
- Double concrete flow: can mix during long minutes without requiring any change of the mixing direction

	BMC 500
Heaped Capacity (l)	500
Overall height (mm)	1120
Width (mm)	1750
Length (mm)	1130
Overall weight (kg)	650
Machine Equipement	+
Hydraulic system	Yes
Flexible tube	Yes
Carriage type	Manitou

Machines compatibility	
Reference number	**757637**
MT 1135	X
MT 1135 easy ST5	X
MT 1135 H easy ST5	X
MT 1335	X
MT 1335 H easy ST5	X
MT 1440	X
MT 1440 A	X
MT 1440 HA	X
MT 1840	X
MT 1840 A	X
MT 1840 easy ST5	X
MT 1840 HA	X
MT-X 1440	X
MT-X 1440 A	X
MT-X 1840	X
MT-X 1840 A	X

MANDATORY MACHINE EQUIPMENT: +

CONSTRUCTION BUCKET

- Wide range of bucket capacity from 650L to 900L.
- Construction bucket suitable for handling materials with a density ≤ 2,1.
- Bucket equipped with interchangeable teeth for better longevity.
- Bucket to be used on machines equipped with an integrated side shift carriage ("TSDL").
- Durable bucket designed for an intensive use: digging, soil or rubble handling applications.
- Specially created for building site and earthwork.
- Very rigid structure that ensures excellent bucket longevity.
- Bucket fitted with teeth made for an easy and powerful penetration on earth.

	CBC 500L / 1500	CBC 700L / 1950	CBC 750L / 2100	CBC 800L / 2250	CBC 900L / 2450
Heaped Capacity (l)	519	696	768	814	893
Struck capacity (l)	435	574	616	666	728
Overall height (mm)	810	810	810	810	810
Width (mm)	1500	1950	2100	2250	2450
Length (mm)	1048	1048	1048	1026	1026
Overall weight (kg)	280	330	345	366	391
Machine Equipement	X	X	X	X	X
Teeth	4	6	6	6	8
Fork spread minimum (mm)	290	271	293	314	266

Machines compatibility					
Reference number	**654474**	**654472**	**654475**	**654471**	**654470**
Reference number TSDL	**-**	**-**	**-**	**52000363**	**52000364**
Skid Steer Carriage reference	**52000784**	**-**	**-**	**-**	**-**
MLT 630-105 ST4	-	-	X	X	-
MLT 630-105 V CP ST4	-	-	X	X	-
MLT 630-105 V ST4	-	-	X	X	-
MLT 630-115	-	-	X	X	-
MLT 630-115 V	-	-	X	X	-
MLT 630-115 V CP	-	-	X	X	-
MLT 635-130 PS+	-	-	-	-	X
MLT 635-140 V+	-	-	-	-	X
MLT 730-115 V	-	-	X	X	-
MLT 730-115 V CP	-	-	X	X	-
MLT 730-115 V CP ST4	-	-	X	X	-
MLT 733-115	-	-	-	-	X
MLT 733-115 LSU	-	-	-	-	X
MLT 733-115 ST4	-	-	-	-	X
MLT 737-130 PS+	-	-	-	-	X
MLT 737-130 PS+ ST4	-	-	-	-	X
MLT 741-130 PS+	-	-	-	X	X
MLT 741-140 V+	-	-	-	X	X
MLT 840-145 PS+	-	-	-	-	X
MLT 841-145 PS+	-	-	-	-	X
MLT 845-100 H	-	-	-	-	X
MLT 845-120	-	-	-	-	X
MLT 1041-145 PS+L	-	-	-	-	X
MLT-X 732	-	-	-	-	X
MLT-X 735 T LSU	-	-	-	-	X
MLT-X 737-130 PS+	-	-	-	X	X
MLT-X 741-140 V+	-	-	-	X	X
MLT-X 840-140 PS+	-	-	-	-	X
MLT-X 841 - 145 PS+	-	-	-	-	X
MLT-X 845-120	-	-	-	-	X
MLT-X 845-120 H	-	-	-	-	X
MLT-X 1041-145 PS+L	-	-	-	-	X

	CBC 500L / 1500	CBC 700L / 1950	CBC 750L / 2100	CBC 800L / 2250	CBC 900L / 2450
Machines compatibility					
MT 420 H	X	-	-	-	-
MT 733 Easy	-	-	-	-	X
MT 933 Easy	-	-	-	-	X
MT 1033 easy	-	-	-	X	X
MT 1135	-	-	-	-	X
MT 1335	-	-	-	-	X
MT 1440	-	X	-	X	X
MT 1440 A	-	X	-	X	X
MT 1440 HA	-	X	-	X	X
MT 1840	-	-	-	X	X
MT 1840 A	-	-	-	X	X
MT 1840 HA	-	-	-	X	X
MT-X 420 H	X	-	-	-	-
MT-X 733	-	-	-	-	X
MT-X 1033	-	-	-	X	X
MT-X 1440	-	X	-	X	X
MT-X 1440 A	-	X	-	X	X
MT-X 1840	-	-	-	X	X
MT-X 1840 A	-	-	-	X	X

MANDATORY MACHINE EQUIPMENT: X

ENVIRONMENT BUCKET

- Bucket developed for a severe, daily use.
- Ideal attachment for the handling of bulk materials (paper, crushed green waste, etc.).
- Flat bottom for an easy penetration in the waste pit & an efficient unloading.
- Max. material density: 1000 kg/m3.
- Extensive use of high resistance steel: body made of S355 steel, side knives, 500 HB lower wear pads and bolt-on blades, etc.
- 3° angle between the bolt-on blade & the bucket's floor for more longevity.
- Massive structure adapted to the recycling conditions (carriage, bottom, body etc.).
- Integrated spill guard to limit material loss while traveling.

	CBA 2450 / 2200 EN	CBA 2500 / 3200 EN
Heaped Capacity (l)	2224	3197
Struck capacity (l)	1371	2485
Overall height (mm)	1223	1435
Width (mm)	2450	2500
Length (mm)	1487	1726
Overall weight (kg)	910	1110
Machine Equipement	X	X
Bolted wearplate (LDR)	Standard	Standard
Wear plate hardness	500	500

Machines compatibility		
Reference number	**52000524**	**52000125**
MLT 733-115	X	-
MLT 733-115 LSU	X	-
MLT 733-115 ST4	X	-
MLT 737-130 PS+	X	-
MLT 737-130 PS+ ST4	X	-
MLT 840-145 PS+	X	-
MLT 841-145 PS+	X	-
MLT 845-100 H	X	-
MLT 961-145 V+ L	-	X
MLT 961-160 V+ L	-	X
MLT 1041-145 PS+L	X	-
MLT-X 737-130 PS+	X	-
MLT-X 840-140 PS+	X	-
MLT-X 841 - 145 PS+	X	-
MLT-X 845-120 H	X	-
MLT-X 961-145 V+ L	-	X
MLT-X 961-160 V+ L	-	X
MLT-X 1041-145 PS+L	X	-

MANDATORY MACHINE EQUIPMENT: X

ENVIRONMENT GRAB BUCKET

- Strong welded teeth.
- Handling bulk materials with a density ≤ 1000 kg/m3.
- 500 HB bolted cutting edge.
- Additional welded plate on grab's teeth (available from the special solution department).
- Allows a massive work output in waste handling.
- Ideal attachment for the handling of bulk materials (paper, crushed green waste, etc.).
- Perfect for work on concrete, asphalt etc.
- Reinforced bucket for intensive waste applications.

	CBG 2450 / 1600 EN	CBG 2450 / 1600 EN WB	CBG 2480 / 2200 EN
Heaped Capacity (l)	1568	1568	2200
Struck capacity (l)	1262	-	1500
Opened grab height (mm)	1868	-	2422
Closed grab height (mm)	1268	-	1502
Width (mm)	2450	2450	2480
Length (mm)	1259	-	1545
Overall weight (kg)	926	947	1350
Machine Equipement			
Teeth	10	10	5
Bolted wearplate (LDR)	Standard	Standard	Standard
Wear plate hardness	500	500	500

Machines compatibility			
Reference number	**52000563**	**52000766**	**790657**
MHT 790	-	-	X
MHT-X 790	-	-	X
MLT 635-130 PS+	X	-	-
MLT 635-140 V+	X	-	-
MLT 733-115	X	-	-
MLT 733-115 LSU	X	-	-
MLT 733-115 ST4	X	-	-
MLT 737-130 PS+	X	-	-
MLT 737-130 PS+ ST4	X	-	-
MLT 741-130 PS+	X	-	-
MLT 741-140 V+	X	-	-
MLT 840-145 PS+	X	-	-
MLT 961-145 V+ L	-	-	X
MLT 961-160 V+ L	-	-	X
MLT-X 737-130 PS+	X	-	-
MLT-X 741-140 V+	X	-	-
MLT-X 840-140 PS+	X	-	-
MLT-X 845-120	X	-	-
MLT-X 845-120 H	X	X	-
MLT-X 961-145 V+ L	-	-	X
MLT-X 961-160 V+ L	-	-	X

MANDATORY MACHINE EQUIPMENT:

GENERAL PURPOSE BUCKET

- Wide range of bucket capacity from 730 L to 1000 L.
- Recovery bucket suitable for handling materials with a density ≤ 2,1.
- Reinforced structure (base, blade, sides).
- Optional "LDR" 500 HB bolt-on wear plate.
- Bucket to be used on machines equipped with an integrated side shift carriage (TSDL).
- Note: road circulation kit mandatory in Italy. Contact your dealer.
- General purpose attachment for a daily use.
- Basic attachment for loading and unloading operations.
- Robust and easy to use this bucket meets the needs of very different work fields.
- Ideal bucket for handling bulk materials: sand & gravel, earth, broken glass etc.

	CBR 600 / 1500	CBR 730 / 1850	CBR 780 / 1950	CBR 850 / 2100	CBR 900 / 2250	CBR 1000 / 2450
Heaped Capacity (l)	583	735	778	843	904	990
Struck capacity (l)	484	600	663	685	736	804
Width (mm)	1500	1850	1950	2100	2250	2450
Length (mm)	845	815	815	838	815	815
Overall weight (kg)	274	318	328	358	360	381
Machine Equipement	×	×	×	×	×	×
Bolted wearplate (LDR)	Not Standard	Not Standard	Not Standard	Not Standard	Not Standard	Not Standard
Wear plate hardness	500	500	500	500	500	500

Machines compatibility						
Reference number	**570614**	**571831**	**570613**	**653047**	**653749**	**654716**
Reference number with bolted wearplate (WP)	**52584881**	**52000369**	**-**	**-**	**-**	**52000370**
Reference number TSDL	**-**	**-**	**-**	**-**	**52000365**	**52000366**
Reference number E-RECO	**-**	**-**	**-**	**-**	**921281**	**-**
Reference number E-RECO 2	**-**	**-**	**-**	**-**	**-**	**925904**
Skid Steer Carriage reference	**52000783**	**-**	**-**	**-**	**-**	**-**
MLA-T 533-145 V+ - ST5	-	-	-	-	-	X
MLT 625-75 H	-	X	-	-	-	-
MLT 630-105 ST4	-	-	-	X	X	-
MLT 630-105 V CP ST4	-	-	-	X	X	-
MLT 630-105 V ST4	-	-	-	X	X	-
MLT 630-115	-	-	-	X	X	-
MLT 630-115 V	-	-	-	X	X	-
MLT 630-115 V CP	-	-	-	X	X	-
MLT 635-130 PS+	-	-	-	-	-	X
MLT 635-140 V+	-	-	-	-	-	X
MLT 730-115 V	-	-	-	X	X	-
MLT 730-115 V CP	-	-	-	X	X	-
MLT 730-115 V CP ST4	-	-	-	X	X	-
MLT 733-115	-	-	-	-	-	X
MLT 733-115 LSU	-	-	-	-	-	X
MLT 733-115 ST4	-	-	-	-	-	X
MLT 737-130 PS+	-	-	-	-	-	X
MLT 737-130 PS+ ST4	-	-	-	-	-	X
MLT 741-130 PS+	-	-	-	-	-	X
MLT 741-140 V+	-	-	-	-	-	X
MLT 840-145 PS+	-	-	-	-	-	X
MLT 845-100 H	-	-	-	-	-	X
MLT 845-120	-	-	-	-	-	X
MLT 940-140 V+	-	-	-	-	-	X
MLT 1040-145 PS+ L	-	-	-	-	-	X
MLT-X 625-75 H	-	X	-	-	-	-
MLT-X 732	-	-	-	-	-	X
MLT-X 735 T LSU	-	-	X	-	X	X
MLT-X 735 T LSU (70 KW)	-	-	-	-	-	X
MLT-X 737-130 PS+	-	-	-	-	-	X

	CBR 600 / 1500	CBR 730 / 1850	CBR 780 / 1950	CBR 850 / 2100	CBR 900 / 2250	CBR 1000 / 2450
Machines compatibility						
MLT-X 741-140 V+	-	-	-	-	-	X
MLT-X 845-120	-	-	-	-	-	X
MLT-X 845-120 H	-	-	-	-	-	X
MRT 2150 Privilege Plus	-	-	-	-	X	-
MRT 2470 Privilege Plus	-	-	-	-	X	-
MRT 2550 Privilege Plus	-	-	-	-	X	-
MRT 3050 Privilege Plus	-	-	-	-	X	-
MRT-X 2150 Privilege Plus	-	-	-	-	X	-
MRT-X 2470 Privilege Plus	-	-	-	-	X	-
MRT-X 2550 Privilege Plus	-	-	-	-	X	-
MRT-X 3050 Privilege Plus	-	-	-	-	X	-
MT 420 H	X	-	-	-	-	-
MT 625 HA	-	X	-	-	-	-
MT 733 Easy	-	-	-	-	-	X
MT 933 Easy	-	-	-	-	X	X
MT 1033 easy	-	-	-	-	X	X
MT 1135	-	-	-	-	X	-
MT 1135 easy ST5	-	-	-	-	X	X
MT 1135 H easy ST5	-	-	-	-	X	-
MT 1135 HA Easy ST5	-	-	-	-	X	-
MT 1135 ST5	-	-	-	-	-	X
MT 1335	-	-	-	-	-	X
MT 1335 ST5	-	-	-	-	-	X
MT 1440	-	-	X	-	X	X
MT 1440 A	-	-	X	-	X	-
MT 1440 A ST5	-	-	-	-	-	X
MT 1440 easy ST5	-	-	-	-	-	X
MT 1440 HA	-	-	X	-	X	-
MT 1440 HA ST5	-	-	-	-	-	X
MT 1440 ST5	-	-	-	-	-	X
MT 1840	-	-	-	-	X	-
MT 1840 A	-	-	-	-	X	-
MT 1840 A ST5	-	-	-	-	-	X
MT 1840 easy ST5	-	-	-	-	-	X
MT 1840 HA	-	-	-	-	X	-
MT 1840 HA ST5	-	-	-	-	-	X
MT 1840 ST5	-	-	-	-	-	X
MT-X 625 H	-	X	-	-	-	-
MT-X 1033	-	-	-	-	X	-
MT-X 1440	-	-	X	-	X	X
MT-X 1440 A	-	-	X	-	X	X
MT-X 1840	-	-	-	-	X	X
MT-X 1840 A	-	-	-	-	X	X

MANDATORY MACHINE EQUIPMENT: X

GENERAL PURPOSE BUCKET (MHT)

- Strong attachments for a long lasting life.
- 500HB bolted wear plate.
- Note: road circulation kit mandatory in Italy. Contact your dealer.
- High-resistance general purpose buckets adapted to the power of MHT heavy telehandlers.

	CBR 1000 / 2500	CBR 1500 / 2500	CBR 2000 / 2500 LDR MHT
Capacity (kg)	1000	1500	2000
Width (mm)	2500	2500	2482
Overall weight (kg)	664	766	926
Machine Equipement	X	X	X
Flexible tube	No	No	No
Bolted wearplate (LDR)	Standard	Standard	Standard

Machines compatibility			
Reference number	**744050**	**732625**	**-**
Reference number E-RECO	**939165**	**939166**	**52000532**
MHT 790	X	X	-
MHT 10130	-	-	X
MHT 10180	-	-	X
MHT 10230	-	-	X
MHT-X 790	X	X	-
MHT-X 860 S2	X	X	-
MHT-X 10130	-	-	X
MHT-X 10180	-	-	X
MHT-X 10230	-	-	X

MANDATORY MACHINE EQUIPMENT: X

GENERAL PURPOSE BUCKET (MRT)

- Bucket dedicated to the handling of all heavy materials (< 2100kg/m3).
- Available with an optional wear bolt-on wear plate to operate on concrete/ asphalt floor.
- Note: rotating telehandlers are not designed for intensive loading applications or for digging applications.
- Perfect for the handling of sand, gravels etc.
- Designed to suit to MRT's specific boom head position.

	CBR 1000 / 2450 (a)	CBR 1000 / 2450 (b)
Capacity (kg)	1000	1000
Width (mm)	2450	2450
Overall weight (kg)	390	390
Machine Equipement	X	X
Opening minimum (mm)	858	858
Flexible tube	No	No
Bolted wearplate (LDR)	-	Standard

Machines compatibility		
Reference number with bolted wearplate (WP)	**-**	**923967**
Reference number E-RECO	**921282**	**-**
Reference number E-RECO 2	**925904**	**-**
MRT 1645 75	X	-
MRT 1645 115	X	-
MRT 1845 75	X	-
MRT 1845 115	X	-
MRT 2145 115	X	-
MRT 2260	X	X
MRT 2545 115	X	-
MRT 2570	X	X
MRT 2660	X	X
MRT 3060	X	X
MRT 3570	X	X
MRT 3570 ES	X	X
MRT-X 1645	X	-
MRT-X 1845	X	-
MRT-X 2145	X	-
MRT-X 2260	X	X
MRT-X 2545	X	-
MRT-X 2570	X	X
MRT-X 2660	X	X
MRT-X 3060	X	X
MRT-X 3570	X	X
MRT-X 3570 ES	X	X

MANDATORY MACHINE EQUIPMENT: X

NEW

GENERAL PURPOSE BUCKET ESSENTIAL

- Capacity: 802L.
- For material density up to 2100 kg/m3.
- Simplified structure with straight sides.
- Integrated level indicator.
- No side strengthener.

- A bucket for all construction applications.
- Dedicated to heavy bulk: sand, earth, stones, gravels, etc.
- Tested at the R&D Center on high demanding applications.
- Designed and validated by Manitou.

	BGP 2000 / 800 Essential	BGP 2450 / 1000 Essential
Heaped Capacity (l)	802	995
Struck capacity (l)	622	766
Overall height (mm)	786	786
Width (mm)	2000	2450
Length (mm)	817	925
Depth (mm)	817	817
Overall weight (kg)	345	397
Flexible tube	No	-
Carriage type	Manitou	-

Machines compatibility		
Reference number	**52688160**	**52658055**
MLT 635-130 PS+	-	X
MLT 635-140 V+	-	X
MLT 733-115	-	X
MLT 733-115 LSU	-	X
MLT 733-115 ST4	-	X
MLT 737-130 PS+	-	X
MLT 737-130 PS+ ST4	-	X
MLT 741-130 PS+	-	X
MLT 741-140 V+	-	X
MLT 841-145 PS+	-	X
MLT 940-140 V+	-	X
MLT 1041-145 PS+L	-	X
MLT-X 732	-	X
MLT-X 735 T LSU	-	X
MLT-X 735 T LSU (70 KW)	-	X
MLT-X 1035 LT LSU	-	X
MT 730 H	X	-
MT 733 Easy	-	X
MT 930 H	X	-
MT 930 HA	X	-
MT 933 Easy	-	X
MT 1033 easy	-	X
MT 1135 easy ST5	-	X
MT 1135 H easy ST5	-	X
MT 1135 HA Easy ST5	-	X
MT 1135 ST5	-	X
MT 1335	-	X
MT 1335 easy ST5	-	X
MT 1335 H easy ST5	-	X
MT 1335 HA easy ST5	-	X
MT 1335 ST5	-	X
MT 1440	-	X
MT 1440 A ST5	-	X
MT 1440 easy ST5	-	X

	BGP 2000 / 800 Essential	BGP 2450 / 1000 Essential
Machines compatibility		
MT 1440 HA ST5	-	X
MT 1440 ST5	-	X
MT 1840 A ST5	-	X
MT 1840 easy ST5	-	X
MT 1840 HA ST5	-	X
MT 1840 ST5	-	X
MT-X 733	-	X
MT-X 733 Mining	-	X
MT-X 1033	-	X
MT-X 1033 Mining	-	X
MT-X 1440	-	X
MT-X 1440 A	-	X
MT-X 1840	-	X
MT-X 1840 A	-	X

MANDATORY MACHINE EQUIPMENT: ╳

NEW

GENERAL PURPOSE BUCKET UK

- Wide range of bucket capacity from 500L to 1300L.
- Recovery bucket suitable for handling materials with a density ≤2.1.
- Reinforced structure (base, blade, sides).
- General purpose attachment for a daily use in construction or de-construction activities.
- Basic attachment for loading and unloading operations on all surfaces.
- Robust and easy to use this bucket meets the needs of very different work fields.
- Ideal bucket for handling bulk materials: sand & gravel, earth, broken glass etc.

	BGP 1500 / 500
Heaped Capacity (l)	500
Struck capacity (l)	400
Overall height (mm)	730
Width (mm)	1520
Length (mm)	800
Overall weight (kg)	228
Flexible tube	No

Machines compatibility	
Reference number	**52664103**
MT 420 H	X

MANDATORY MACHINE EQUIPMENT: ╳

GRAPPLE BUCKET (COMPACT MACHINES)

- 400HB cutting edge.
- 400HB side blades for more resistance.
- Designed for all agriculture applications.
- All-purpose attachment: handles bulk material, grabs etc.

	BG 900 / 320	BG 1200 / 430	BG 1300 / 470	BG 1400 / 510 (a)	BG 1400 / 510 (b)
Heaped Capacity (l)	320	430	470	510	510
Overall height (mm)	840	840	840	840	840
Width (mm)	900	1200	1300	1400	1400
Depth (mm)	995	995	995	995	995
Overall weight (kg)	220	268	270	275	275
Flexible tube	No	No	No	No	No

Machines compatibility					
All-Tach® Narrow	**N51502262**	**N51502263**	**N51502216**	**N51502264**	**-**
All-Tach®	**-**	**-**	**-**	**-**	**N51502266**
4 point Carriage	**N51502273**	**N51502274**	**N51502275**	**N51502276**	**N51502278**
Euro Carriage	**-**	**N51502286**	**N51502287**	**N51502288**	**N51502290**
MLA 1-25 H	X	X	-	-	-
MLA 3-35 H	-	-	X	X	-
MLA 4-50 H	-	-	-	-	X
MLA 6-65 H-Z	-	X	-	-	-

	BG 1500 / 540 (a)	BG 1500 / 540 (b)	BG 1650 FO	BG 1950 FO	BG 2150 FO
Heaped Capacity (l)	540	540	660	780	870
Overall height (mm)	840	840	850	850	850
Width (mm)	1500	1500	1650	1950	2150
Depth (mm)	995	995	958	958	958
Overall weight (kg)	280	285	355	400	425
Flexible tube	No	No	No	No	No

Machines compatibility					
All-Tach® Narrow	**N51502265**	**-**	**-**	**-**	**-**
All-Tach®	**-**	**N51502268**	**N51502521**	**N51502520**	**N51502519**
4 point Carriage	**N51502277**	**N51502279**	**N51502598**	**N51502600**	**N51502602**
Euro Carriage	**N51502289**	**N51502291**	**N51502557**	**N51502559**	**N51502561**
MLA 3-35 H	X	-	-	-	-
MLA 4-50 H	-	X	-	-	-
MLA 6-65 H-Z	-	-	X	X	-
MLA 7-75 H-Z	-	-	X	X	X

HD DEMOLITION AND SHIP TRIMMING BUCKET (COMPACT MACHINES)

- Reinforced structure: sides, upper part etc.
- 400 HB wear plate and side plates.
- Low profile bucket: very good material penetration & cab access.
- Very strong bucket for severe application: demolition, ship trimming etc.

	BD 1080 / 180	BD 1380 / 320	BD 1520 / 350	BD 1680 / 670	BD 1760 / 500	BD 1760 / 580	BD 1760 / 700
Heaped Capacity (l)	180	320	350	670	580	500	700
Overall height (mm)	427	470	470	600	501	502	600
Width (mm)	1080	1380	1520	1680	1760	1760	1760
Depth (mm)	700	841	841	1100	916	924	1100
Overall weight (kg)	68	137	143	295	190	190	305
Flexible tube	No	No	No	No	No	No	No

Machines compatibility							
All-Tach®	N726005	N736008	N736009	N51502029	N51502464	N757007	N51502030
850 R	X	-	-	-	-	-	-
1050 R	-	X	-	-	-	-	-
1350 R NXT2	-	X	X	-	-	-	-
1350 RT	-	X	X	-	-	-	-
1500 R NXT2	-	-	-	-	-	X	-
1650 R	-	-	-	-	-	X	-
1750 RT NXT:3	-	-	-	X	-	-	X
1900 R	-	-	-	-	X	-	-
2200 R	-	-	-	-	X	-	-
2700 V NXT:2	-	-	-	-	-	X	-

	BD 1830 / 520	BD 1830 / 600	BD 1850 / 740	BD 1880 / 750	BD 2140 / 870 (a)	BD 2140 / 870 (b)
Heaped Capacity (l)	600	520	740	750	870	870
Overall height (mm)	501	502	600	600	600	600
Width (mm)	1830	1830	1850	1880	2140	2140
Depth (mm)	916	924	1100	1100	1100	1100
Overall weight (kg)	220	206	315	315	320	330
Flexible tube	No	No	No	No	No	No

Machines compatibility						
All-Tach®	N51502465	N757008	N51502031	N51502073	N700246	N51502032
1750 RT NXT:3	-	-	X	-	-	-
2100 RT NXT:3	-	-	X	-	-	X
2200 R	-	X	-	-	-	-
2600 R	-	X	-	X	-	-
2700 V NXT:2	X	-	-	-	-	-
3300 V NXT:2	-	-	-	X	X	-
4200 V	-	-	-	-	X	-

HIGH CAPACITY AGRICULTURAL BUCKET

- Bulk product bucket suitable for handling materials with a density ≤ 1.
- Reinforced structure (base, blade and sides).
- Ideal bucket for bulk products (cereals, woodchip, mineral feed etc.)
- Modern design with maximal rigidity and resistance.
- Improved shape designed with 3° angle for quick loading and unloading operation.
- 500HB bolt-on cutting edge (LDR) for more longevity.

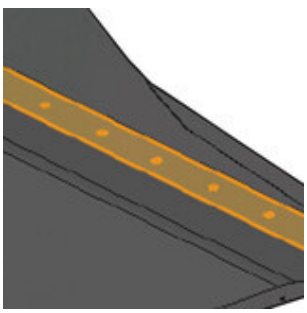

	CBA 2500 / 4000 LDR	CBA 2700 / 4500 LDR
Capacity (kg)	4007	4550
Heaped Capacity (l)	4007	4550
Struck capacity (l)	3195	3617
Overall height (mm)	1517	1677
Width (mm)	2500	2700
Length (mm)	1700	1700
Overall weight (kg)	1310	1400
Machine Equipement	×	×
Bolted wearplate (LDR)	Standard	Standard
Wear plate hardness	500	500

Machines compatibility		
Reference number	**52603178**	**52000508**
MLT 961-145 V+ L	X	X
MLT 961-160 V+ L	X	X
MLT-X 961-145 V+ L	X	X
MLT-X 961-160 V+ L	X	X

MANDATORY MACHINE EQUIPMENT:

HIGH CAPACITY AGRICULTURAL GRAB BUCKET

- Welded teeth - MS.
- Handling materials with a density ≤ 1000 kg/m3.
- 500HB bolt-on cutting edge in standard.
- Reinforced bucket: improved material grip on sides & top Increased struck capacity (1500 L).
- Robust and versatile bucket suitable for massive agricultural applications.
- THE grab bucket for maximum work output.
- High resistance steel.
- Reinforced bucket for a massive work output in agricultural applications.
- Ideal to handle cereals and other bulk materials.

	CBG 2480 / 2000 MS	CBG 2480 / 2600 MS
Heaped Capacity (l)	2000	2600
Struck capacity (l)	1500	1500
Opened grab height (mm)	2292	2452
Closed grab height (mm)	1502	1502
Width (mm)	2480	2480
Length (mm)	1491	1670
Overall weight (kg)	1225	1357
Machine Equipement		
Teeth / Fingers	6 / 6	7 / 7
Fork spread minimum (mm)	453	362
Fork spread maximum (mm)	453	362
Bolted wearplate (LDR)	Standard	Standard
Wear plate hardness	500	500

Machines compatibility		
Reference number	**790656**	**790658**
MLT 840-145 PS+	X	-
MLT 841-145 PS+	X	-
MLT 845-100 H	X	-
MLT 845-120	X	-
MLT 961-145 V+ L	-	X
MLT 961-160 V+ L	-	X
MLT 1040-145 PS+ L	X	-
MLT 1041-145 PS+L	X	-
MLT-X 840-140 PS+	X	-
MLT-X 841 - 145 PS+	X	-
MLT-X 845-120	X	-
MLT-X 845-120 H	X	-
MLT-X 961-145 V+ L	-	X
MLT-X 961-160 V+ L	-	X
MLT-X 1040-140 PS+ L	X	-
MLT-X 1041-145 PS+L	X	-

MANDATORY MACHINE EQUIPMENT:

HIGH TIP BUCKET (COMPACT MACHINES)

- For materials with a density < 1,8t/m³.
- Noticeably increases the machine's lifting height (+ 800mm or more).
- Improves the efficiency of truck/container loading applications.

	BHS 1525 / 550
Heaped Capacity (l)	550
Overall height (mm)	643
Width (mm)	1525
Depth (mm)	970
Overall weight (kg)	340
Flexible tube	No

Machines compatibility	
All-Tach®	**N004050**
MLA 4-50 H	X
MLA 6-65 H-Z	X
MLA 7-75 H-Z	X

INDUSTRIAL GRAPPLE BUCKET (COMPACT MACHINES)

- HD bolted teeth for more digging efficiency.
- 400HB cutting edge & 400HB side blades for more resistance.
- Designed for all recycling applications.
- All-purpose attachment: handles bulk material, pushes, grabs etc.

	BGI 1080 / 250	BGI 1380 / 210	BGI 1680 / 560 (a)	BGI 1680 / 560 (b)	BGI 1760 / 600
Heaped Capacity (l)	250	210	560	560	600
Overall height (mm)	691	704	761	761	761
Width (mm)	1080	1380	1680	1680	1760
Depth (mm)	814	958	1007	1007	1007
Overall weight (kg)	120	292	400	400	440
Teeth	3	3	4	4	4
Flexible tube	No	No	No	No	No

Machines compatibility					
All-Tach®	N726013	N736031	N757015	N51502063	N51502474
850 R	X	-	-	-	-
1050 R	-	X	-	-	-
1350 R NXT2	-	X	-	-	-
1350 RT	-	X	-	-	-
1500 R NXT2	-	-	X	-	-
1650 R	-	-	X	-	-
1750 RT NXT:3	-	-	-	X	-
1900 R	-	-	X	-	-
2200 R	-	-	-	-	X

	BGI 1850 / 620 (a)	BGI 1850 / 620 (b)	BGI 1850 / 620 (c)	BGI 2080 / 700	BGI 2140 / 720
Heaped Capacity (l)	620	620	620	700	720
Overall height (mm)	761	761	761	761	761
Width (mm)	1850	1850	1850	2080	2140
Depth (mm)	1007	1007	1007	1007	1007
Overall weight (kg)	455	455	455	475	500
Teeth	4	4	4	4	4
Flexible tube	No	No	No	No	No

Machines compatibility					
All-Tach®	N757021	N51502475	N51502064	N51502084	N51502065
1750 RT NXT:3	-	-	X	-	-
2100 RT NXT:3	-	-	X	-	X
2600 R	-	X	-	-	-
2700 V NXT:2	X	-	-	-	-
3300 V NXT:2	-	-	-	X	-
4200 V	-	-	-	X	-

LIGHT MATERIAL BUCKET (COMPACT MACHINES)

- Suited for bulk materials with a density < 1t/m³.
- 400HB cutting edge for more resistance.
- Wide range of bucket capacities.
- High capacities for efficient loading applications

	BLM 920 / 240	BLM 920 / 430	BLM 1080 / 290	BLM 1080 / 510	BLM 1200 / 580	BLM 1300 / 630 (a)	BLM 1300 / 630 (b)
Heaped Capacity (l)	240	430	290	510	580	630	630
Overall height (mm)	490	775	490	775	775	775	775
Width (mm)	920	920	1080	1080	1200	1300	1300
Depth (mm)	819	1025	819	1025	1025	1025	988
Overall weight (kg)	62	169	67	173	184	196	203
Flexible tube	No	No	No	No	No	No	No

Machines compatibility							
All-Tach® Narrow	-	N004021	-	N004022	N004023	N004024	-
All-Tach®	N726009	-	N726010	-	-	-	N004088
4 point Carriage	-	N003021	-	N003022	N003023	N003024	N003088
Euro Carriage	-	-	-	N51502113	N51502114	N51502115	N51502160
850 R	X	-	X	-	-	-	-
AL140	-	X	-	X	X	-	-
AL340	-	-	-	-	X	X	-
AL440	-	-	-	-	-	-	X
MLA 1-25 H	-	X	-	X	X	-	-
MLA 3-35 H	-	-	-	-	X	X	-
MLA 4-50 H	-	-	-	-	-	-	X

	BLM 1380 / 430	BLM 1400 / 680 (a)	BLM 1400 / 680 (b)	BLM 1500 / 730 (a)	BLM 1500 / 730 (b)	BLM 1650 / 1100	BLM 1680 / 530
Heaped Capacity (l)	430	680	680	730	730	810	530
Overall height (mm)	600	775	775	775	775	810	600
Width (mm)	1380	1400	1400	1500	1500	1650	1680
Depth (mm)	890	1025	988	1025	988	1224	890
Overall weight (kg)	140	194	210	208	218	1100	160
Flexible tube	No	No	No	No	No	No	No

Machines compatibility							
All-Tach® Narrow	-	N004025	-	N004026	-	-	-
All-Tach®	N736013	-	N004089	-	N004090	N51502537	N736015
4 point Carriage	-	N003025	N003089	N003026	N003090	N51502603	-
Euro Carriage	-	N002025	N51502161	N002026	N51502162	N51502562	-
1050 R	X	-	-	-	-	-	-
1350 R NXT2	X	-	-	-	-	-	X
1350 RT	X	-	-	-	-	-	X
1500 R NXT2	-	-	-	-	-	-	X
MLA 3-35 H	-	X	-	X	-	-	-
MLA 4-50 H	-	-	X	-	X	-	-
MLA 6-65 H-Z	-	-	-	-	-	X	-
MLA 7-75 H-Z	-	-	-	-	-	X	-

	BLM 1680 / 670	BLM 1760 / 790	BLM 1760 / 820	BLM 1800 / 1200	BLM 1850 / 830	BLM 1850 / 860	BLM 1850 / 1100
Heaped Capacity (l)	670	820	790	810	860	830	1100
Overall height (mm)	605	711	705	810	711	705	832
Width (mm)	1680	1760	1760	1800	1850	1850	1850
Depth (mm)	1023	1020	1012	1224	1020	1012	1102
Overall weight (kg)	242	275	264	1200	290	275	350
Flexible tube	No	No	No	No	No	No	No

Machines compatibility							
All-Tach® Narrow	-	-	-	-	-	-	-
All-Tach®	N747011	N757013	N51502468	N51502536	N757014	N51502469	N51502037
4 point Carriage	-	-	-	N51502605	-	-	-
Euro Carriage	-	-	-	N51502564	-	-	-
1650 R	X	-	-	-	-	-	-
1750 RT NXT:3	-	-	-	-	-	-	X
1900 R	X	-	-	-	-	-	-
2100 RT NXT:3	-	-	-	-	-	-	X
2200 R	-	-	X	-	-	X	-
2600 R	-	-	-	-	-	X	-
2700 V NXT:2	-	X	-	-	X	-	-
MLA 6-65 H-Z	-	-	-	X	-	-	-
MLA 7-75 H-Z	-	-	-	X	-	-	-

	BLM 1950 / 1300	BLM 2080 / 1250	BLM 2140 / 1290	BLM 2150 / 1420	BLM 2350 / 1370 (a)	BLM 2350 / 1370 (b)
Heaped Capacity (l)	810	1250	1290	810	1370	1370
Overall height (mm)	810	832	832	810	832	832
Width (mm)	1950	2080	2140	2150	2350	2350
Depth (mm)	1224	1102	1102	1224	1102	1102
Overall weight (kg)	1300	370	381	1420	405	405
Flexible tube	No	No	No	No	No	No

Machines compatibility						
All-Tach® Narrow	-	-	-	-	-	-
All-Tach®	N51502535	N51502076	N700248	N51502534	N700249	N51502038
4 point Carriage	N51502607	-	-	N51502609	-	-
Euro Carriage	N51502566	-	-	N51502568	-	-
2100 RT NXT:3	-	-	-	-	-	X
2600 R	-	X	-	-	-	-
3300 V NXT:2	-	X	X	-	-	-
4200 V	-	X	X	-	X	-
MLA 6-65 H-Z	X	-	-	-	-	-
MLA 7-75 H-Z	X	-	-	X	-	-

LIGHT MATERIAL BUCKET (MHT)

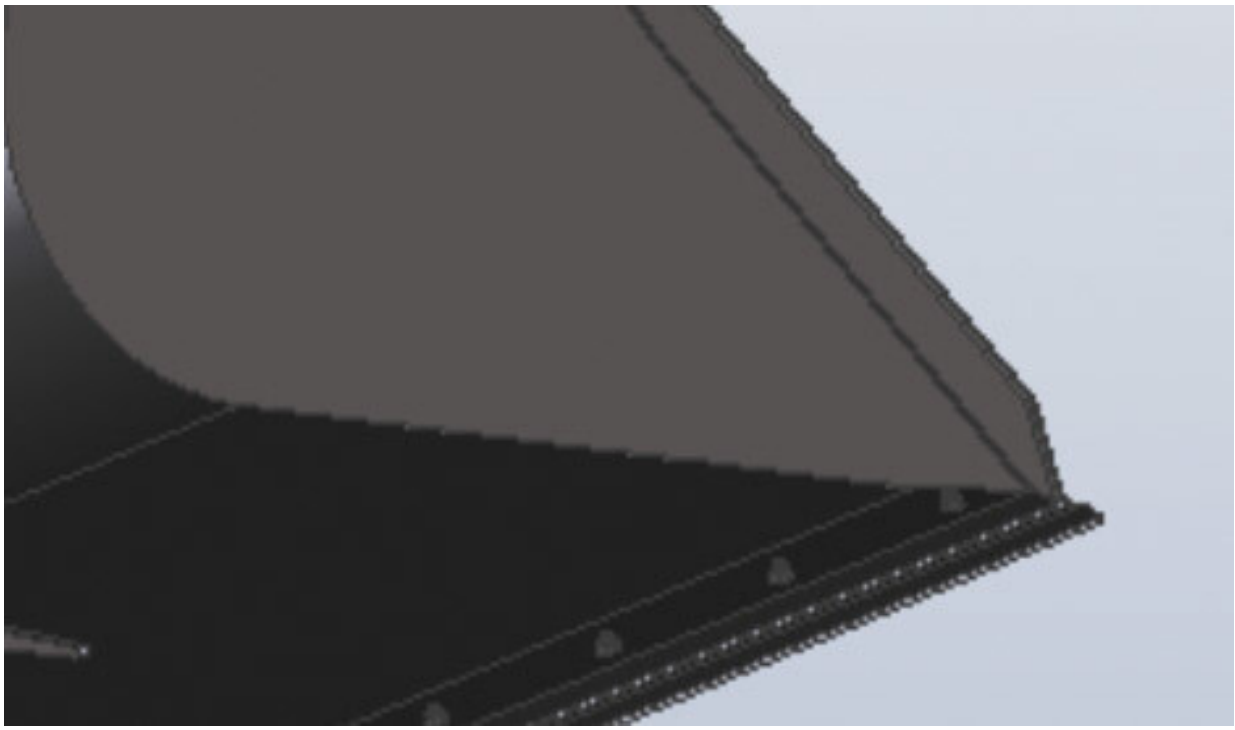

- Max. density 1000kg/m3.
- Strong attachments for a long lasting life.
- 500HB bolted wear plate.
- Note: road circulation kit mandatory in Italy. Contact your dealer.
- High-resistance light material buckets adapted to the power of MHT heavy telehandlers.

	CBA 2500 / 2000 LDR	CBA 3000 / 2500 LDR	CBA 4000 / 2500 LDR
Heaped Capacity (l)	2000	3023	4078
Struck capacity (l)	-	2342	3147
Overall width (over tyres) (mm)	-	-	1527
Overall height (mm)	1127	1283	-
Width (mm)	2500	2500	2500
Length (mm)	1212	1492	2075
Overall weight (kg)	709	866	1035
Machine Equipement	×	×	×
Flexible tube	No	No	No
Bolted wearplate (LDR)	Standard	Standard	Standard

Machines compatibility			
Reference number	**744046**	**744047**	**-**
Reference number E-RECO	**939160**	**939161**	**939162**
Reference number E-RECO 2	**-**	**-**	**52000534**
MHT 790	X	X	X
MHT-X 790	X	X	X
MHT-X 860 S2	X	X	-

LIGHT MATERIAL BUCKET (MRT)

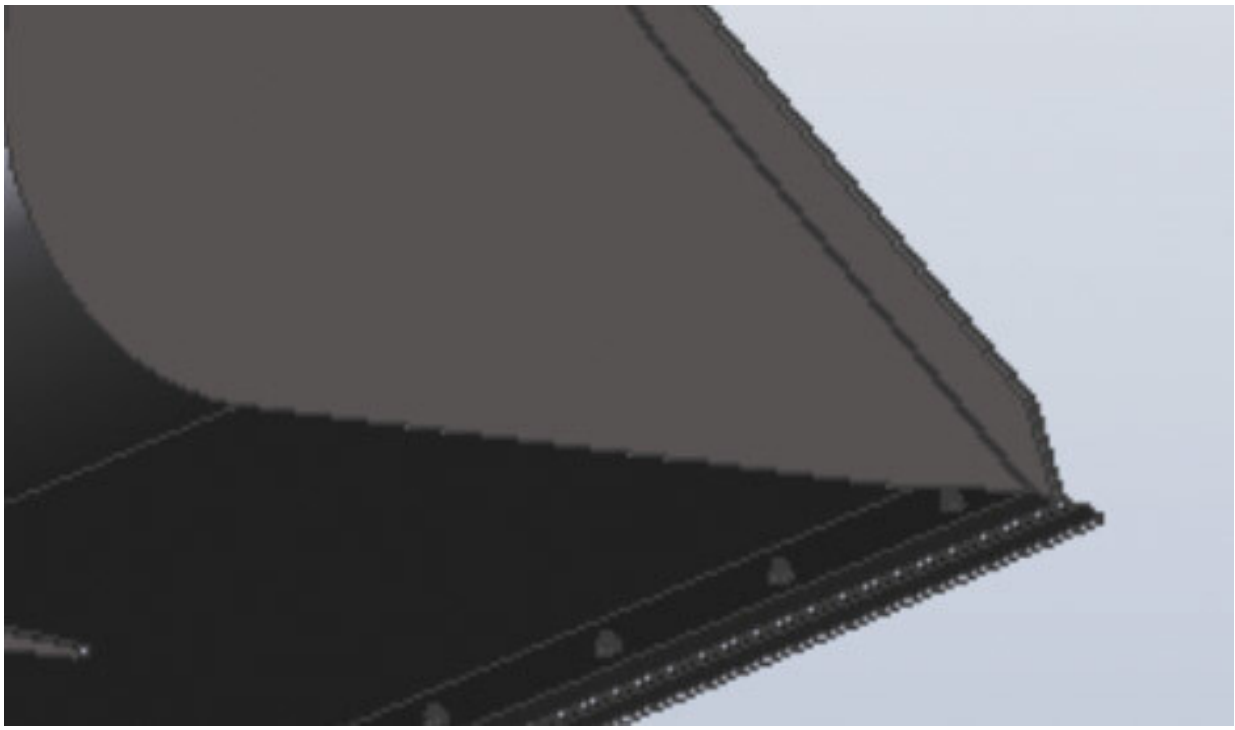

- Bucket dedicated to the handling of light materials (< 1000kg/m3).

- Usually placed in from on a window/ an opening on a deconstructed building to load rubbles.
- Especially usefull for deconstruction applications: the wide opening of this bucket prevents rubbles & misc. materials from falling to the ground.
- Designed to suit to MRT's specific boom head position.
- Note: rotating telehandlers are not designed for intensive loading applications.

	CBA 1500 / 2450
Heaped Capacity (l)	1529
Struck capacity (l)	1101
Overall height (mm)	997
Width (mm)	2450
Length (mm)	1170
Overall weight (kg)	500
Machine Equipement	X
Opening minimum (mm)	1215
Flexible tube	No

Machines compatibility	
Reference number E-RECO	**921279**
MRT 1645 75	X
MRT 1645 115	X
MRT 1845 75	X
MRT 1845 115	X
MRT 2145 115	X
MRT 2150 Privilege Plus	X
MRT 2260	X
MRT 2470 Privilege Plus	X
MRT 2545 115	X
MRT 2550 Privilege Plus	X
MRT 2570	X
MRT 2660	X
MRT 3050 Privilege Plus	X
MRT 3060	X
MRT 3570	X
MRT 3570 ES	X
MRT-X 1645	X
MRT-X 1845	X
MRT-X 2145	X
MRT-X 2150 Privilege Plus	X
MRT-X 2260	X
MRT-X 2470 Privilege Plus	X
MRT-X 2545	X
MRT-X 2550 Privilege Plus	X
MRT-X 2570	X
MRT-X 2660	X
MRT-X 3050 Privilege Plus	X
MRT-X 3060	X
MRT-X 3570	X
MRT-X 3570 ES	X

MANDATORY MACHINE EQUIPMENT: X

LIGHT MATERIAL BUCKET WITH WEAR PLATE (COMPACT MACHINES)

- Suited for bulk materials with a density < 1t/m³.
- 400HB cutting edge for more resistance.
- Wide range of bucket capacities.
- High capacities for efficient loading applications.

	BLM WP 1650 / 1100	BLM WP 1800 / 1200	BLM WP 1950 / 1300	BLM WP 2150 / 1420
Heaped Capacity (l)	1100	1200	1300	1420
Overall height (mm)	810	810	810	810
Width (mm)	1650	1800	1950	2150
Depth (mm)	1271	1271	1271	1271
Overall weight (kg)	342	365	387	417
Flexible tube	No	No	No	No

Machines compatibility				
All-Tach®	**N51502533**	**N51502532**	**N51502531**	**N51502530**
4 point Carriage	**N51502604**	**N51502606**	**N51502608**	**N51502610**
Euro Carriage	**N51502563**	**N51502565**	**N51502567**	**N51502569**
MLA 6-65 H-Z	X	X	X	-
MLA 7-75 H-Z	X	X	X	X

SHEAR BUCKETS

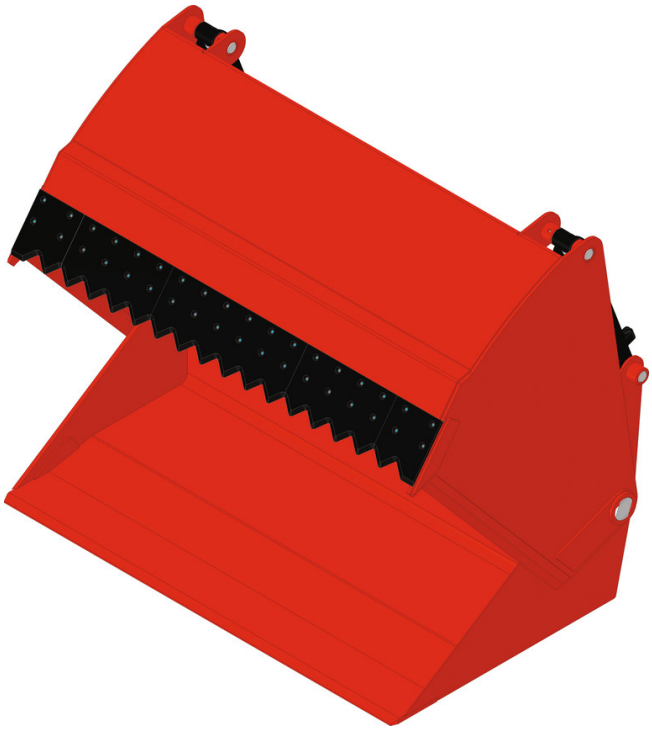

- Boxed structure, rigidity & longevity.
- Body made of high resistance steels.
- Heavy duty teeth for easy penetration.
- Lateral shears for a good pit penetration & clean cutting.
- Increased cylinder diameter for more power.
- 500 HB welded cutting edge.
- Suitable for any type of silage.
- Efficient and accurate cutting of the silage pit.
- Very clean silage pit face avoiding secondary fermentation.
- Powerful attachment for a fast cutting.
- Open back for more visibility.
- Bucket-type bottom, ideal for the handling of mineral feed & other materials.

	SHB 2200 / 1650	SHB 2400 / 1800
Heaped Capacity (l)	1650	1800
Opened grab height (mm)	1475	1475
Closed grab height (mm)	1010	1010
Width (mm)	2254	2454
Length (mm)	1295	1295
Depth (mm)	850	850
Overall weight (kg)	892	1080
Machine Equipement		
Wear plate hardness	500	500

Machines compatibility		
Reference number	**52000386**	**52000387**
MLA-T 533-145 V+ - ST5	X	-
MLT 635-130 PS+	X	-
MLT 635-140 V+	X	-
MLT 733-115	-	X
MLT 733-115 LSU	-	X
MLT 733-115 ST4	-	X
MLT 737-130 PS+	-	X
MLT 737-130 PS+ ST4	-	X
MLT 741-130 PS+	-	X
MLT 741-140 V+	-	X
MLT 840-145 PS+	-	X
MLT 841-145 PS+	-	X
MLT 940-140 V+	-	X
MLT 1040-145 PS+ L	-	X
MLT 1041-145 PS+L	-	X
MLT-X 732	X	-
MLT-X 735 T LSU	X	-
MLT-X 735 T LSU (70 KW)	X	-
MLT-X 737-130 PS+	-	X
MLT-X 741-140 V+	-	X
MLT-X 840-140 PS+	-	X
MLT-X 841 - 145 PS+	-	X
MLT-X 1040-140 PS+ L	-	X
MLT-X 1041-145 PS+L	-	X

MANDATORY MACHINE EQUIPMENT:

SILAGE FACING BUCKET

- Synchronized hydraulic movements.
- Hydraulic motor integrated in the rotor, perfect protection & longevity.
- Backward rotor rotation, better bucket filling 500 HB wear plate.
- Handling material with a density ≤ 1000 kg/m3.
- Loads and aerates silages in one operation.
- Ready-to-use silage: direct distribution or use in the mixing wagon.
- Clean silage pit face, limits secondary fermentation.
- Time-saving, a single attachment for the handling of silage and bulk feed.
- For corn silage and grass silage (short wisps).
  Not suitable for long wisp silage (10 cm max.).

	CRS 2150 / 1650	CRS 2350 / 1800	CRS 2550 / 2000
Heaped Capacity (l)	1650	1800	2000
Overall width (mm)	2150	2350	2550
Overall weight (kg)	920	950	950
Machine Equipement	+	+	+

Machines compatibility			
Reference number	**52612539**	**52612542**	**52612540**
MLT 625-75 H	X	-	-
MLT 630-105 ST4	-	X	-
MLT 630-105 V CP ST4	-	X	-
MLT 630-105 V ST4	-	X	-
MLT 630-115	-	X	-
MLT 630-115 V	-	X	-
MLT 630-115 V CP	-	X	-
MLT 730-115 V	-	X	-
MLT 730-115 V CP	-	X	-
MLT 730-115 V CP ST4	-	X	-
MLT 733-115	-	-	X
MLT 733-115 LSU	-	-	X
MLT 733-115 ST4	-	-	X
MLT 737-130 PS+	-	-	X
MLT 737-130 PS+ ST4	-	-	X
MLT 840-145 PS+	-	-	X
MLT 841-145 PS+	-	-	X
MLT 1040-145 PS+ L	-	-	X
MLT 1041-145 PS+L	-	-	X
MLT-X 625-75 H	X	-	-
MLT-X 732	-	-	X
MLT-X 735 T LSU	-	-	X
MLT-X 737-130 PS+	-	-	X
MLT-X 840-140 PS+	-	-	X
MLT-X 841 - 145 PS+	-	-	X
MLT-X 1040-140 PS+ L	-	-	X
MLT-X 1041-145 PS+L	-	-	X

MANDATORY MACHINE EQUIPMENT: +

STANDARD DIGGING BUCKET (COMPACT MACHINES)

- Heavy duty construction.

- Wear plates under the bucket.
- 400HB cutting edge & 400HB side blades for more resistance.

	BS 920 / 150	BS 920 / 250	BS 980 / 270	BS 1080 / 180	BS 1080 / 300	BS 1150 / 320	BS 1200 / 340
Heaped Capacity (l)	150	250	270	180	300	320	340
Overall height (mm)	427	626	626	427	626	626	626
Width (mm)	920	920	980	1080	1080	1150	1200
Depth (mm)	700	817	817	700	817	817	817
Overall weight (kg)	50	114	120	55	126	135	136
Flexible tube	No	No	No	No	No	No	No

Machines compatibility							
All-Tach® Narrow	-	N004010	N004011	-	N004012	N004013	N004014
All-Tach®	N726001	-	-	N726002	-	-	-
4 point Carriage	-	N003010	N003011	-	N003012	N003013	N003014
Euro Carriage	-	-	N51502100	-	N51502101	N51502102	N51502103
850 R	X	-	-	X	-	-	-
AL140	-	X	X	-	X	X	X
AL340	-	-	-	-	-	X	X
MLA 1-25 H	-	X	X	-	X	X	X
MLA 3-35 H	-	-	-	-	-	X	X

	BS 1250 / 280	BS 1300 / 370	BS 1300 / 380	BS 1380 / 320	BS 1400 / 400	BS 1400 / 410	BS 1480 / 340
Heaped Capacity (l)	280	340	380	320	400	410	340
Overall height (mm)	470	626	675	470	626	675	470
Width (mm)	1250	1300	1300	1380	1400	1400	1480
Depth (mm)	841	817	760	841	817	760	841
Overall weight (kg)	134	145	168	137	151	180	141
Flexible tube	No	No	No	No	No	No	No

Machines compatibility							
All-Tach® Narrow	-	N004015	-	-	N004016	-	-
All-Tach®	N736001	-	N004076	N736002	-	N004077	N736061
4 point Carriage	-	N003015	N003076	-	N003016	N003077	-
Euro Carriage	-	N003015	N51502154	-	N002016	N51502155	-
1050 R	X	-	-	X	-	-	X
1350 R NXT2	-	-	-	X	-	-	X
1350 RT	X	-	-	X	-	-	X
MLA 3-35 H	-	-	-	-	X	-	-
MLA 4-50 H	-	X	X	-	-	X	-

	BS 1500 / 430	BS 1500 / 440	BS 1520 / 350	BS 1550 / 360	BS 1650 / 730	BS 1680 / 400	BS 1680 / 480
Heaped Capacity (l)	430	440	350	360	730	400	480
Overall height (mm)	626	675	470	470	730	450	502
Width (mm)	1500	1500	1525	1550	1650	1680	1680
Depth (mm)	817	760	841	841	1024	843	924
Overall weight (kg)	160	192	143	150	265	148	188
Flexible tube	No	No	No	No	No	No	No

Machines compatibility							
All-Tach® Narrow	**N004087**	**-**	**-**	**-**	**-**	**-**	**-**
All-Tach®	**-**	**N004078**	**N736003**	**N736065**	**N51502506**	**N747002**	**N51502457**
4 point Carriage	**N003017**	**N003078**	**-**	**-**	**N51502611**	**-**	**-**
Euro Carriage	**N51502104**	**N51502156**	**-**	**-**	**N51502570**	**-**	**-**
1350 R NXT2	-	-	X	X	-	-	-
1350 RT	-	-	X	X	-	-	-
1500 R NXT2	-	-	-	-	-	X	-
1650 R	-	-	-	-	-	X	-
1900 R	-	-	-	-	-	-	X
MLA 3-35 H	X	-	-	-	-	-	-
MLA 4-50 H	-	X	-	-	-	-	-
MLA 6-65 H-Z	-	-	-	-	X	-	-
MLA 7-75 H-Z	-	-	-	-	X	-	-

	BS 1680 / 670	BS 1760 / 500	BS 1760 / 580	BS 1760 / 700	BS 1800 / 800	BS 1830 / 520	BS 1830 / 600
Heaped Capacity (l)	670	580	500	700	800	600	520
Overall height (mm)	600	801	502	600	730	501	502
Width (mm)	1680	1760	1760	1760	1800	1830	1830
Depth (mm)	1100	916	924	1100	1024	916	924
Overall weight (kg)	295	190	190	305	285	220	206
Flexible tube	No	No	No	No	No	No	No

Machines compatibility							
All-Tach® Narrow	-	-	-	-	-	-	-
All-Tach®	N51502021	N51502459	N748001	N51502022	N51502505	N51502461	N757073
4 point Carriage	-	-	-	-	N51502614	-	-
Euro Carriage	-	-	-	-	N51502573	-	-
1500 R NXT2	-	-	X	-	-	-	-
1650 R	-	-	X	-	-	-	-
1750 RT NXT:3	X	-	-	X	-	-	-
1900 R	-	X	-	-	-	-	-
2200 R	-	X	-	-	-	X	-
2600 R	-	-	-	-	-	X	-
2700 V NXT:2	-	-	X	-	-	-	X
MLA 6-65 H-Z	-	-	-	-	X	-	-
MLA 7-75 H-Z	-	-	-	-	X	-	-

	BS 1850 / 740	BS 1880 / 750	BS 1950 / 860	BS 2140 / 870 (a)	BS 2140 / 870 (b)	BS 2150 / 950
Heaped Capacity (l)	740	750	870	870	870	960
Overall height (mm)	600	600	730	600	600	730
Width (mm)	1850	1880	1950	2140	2140	2150
Depth (mm)	1100	1100	1024	1100	1100	1024
Overall weight (kg)	315	315	300	320	230	333
Flexible tube	No	No	No	No	No	No

Machines compatibility						
All-Tach® Narrow	-	-	-	-	-	-
All-Tach®	N51502023	N51502071	N51502547	N700244	N51502024	N51502546
4 point Carriage	-	-	N51502617	-	-	N51502620
Euro Carriage	-	-	N51502576	-	-	N51502579
1750 RT NXT:3	X	-	-	-	-	-
2100 RT NXT:3	X	-	-	-	X	-
2600 R	-	X	-	-	-	-
3300 V NXT:2	-	X	-	X	-	-
4200 V	-	-	-	X	-	-
MLA 6-65 H-Z	-	-	X	-	-	-
MLA 7-75 H-Z	-	-	X	-	-	X

STANDARD DIGGING BUCKET WITH TEETH (COMPACT MACHINES)

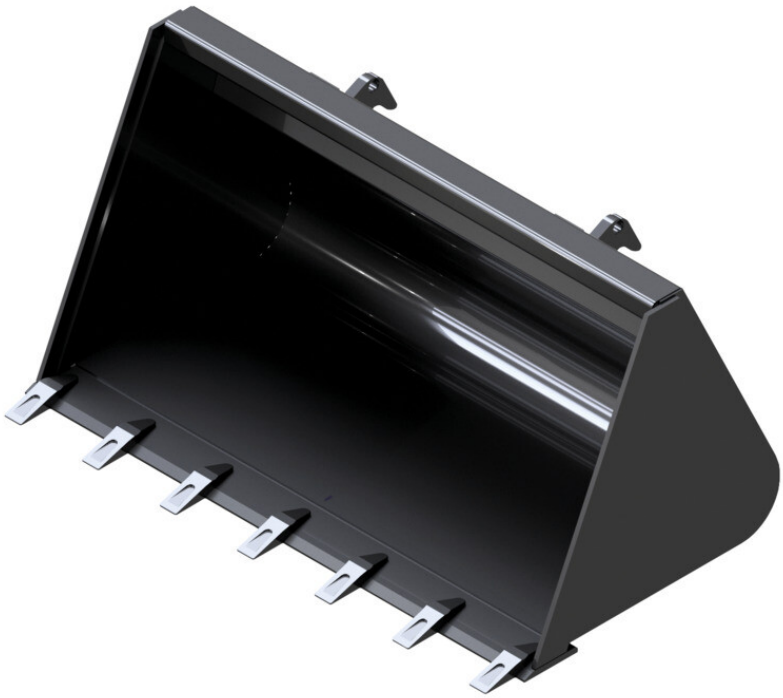

- 400HB cutting edge and side plates for more resistance.
- Safe skid steer cab access.
- Heavy duty construction with wear plates & HD teeth.

	BS 920 / 150 T	BS 920 / 250 T	BS 980 / 270 T	BS 1080 / 180 T	BS 1080 / 300 T	BS 1150 / 320 T	BS 1200 / 340 T	BS 1250 / 280 T
Heaped Capacity (l)	150	250	270	180	300	320	340	280
Overall height (mm)	427	626	626	427	626	626	626	470
Width (mm)	920	920	980	1080	1080	1150	1200	1250
Depth (mm)	700	907	907	700	907	898	907	841
Overall weight (kg)	50	119	125	55	132	142	142	134
Teeth	5	5	5	6	6	6	6	6
Flexible tube	No	No	No	No	No	No	No	No

Machines compatibility								
All-Tach® Narrow	**-**	**N004052**	**N004053**	**-**	**N004054**	**N004055**	**N004056**	**-**
All-Tach®	**N726003**	**-**	**-**	**N726004**	**-**	**-**	**-**	**N736004**
4 point Carriage	**-**	**N003052**	**N003053**	**-**	**N003054**	**N003055**	**N003056**	**-**
Euro Carriage	**-**	**-**	**N51502106**	**-**	**N51502107**	**N51502108**	**N51502109**	**-**
850 R	X	-	-	X	-	-	-	-
1050 R	-	-	-	-	-	-	-	X
1350 RT	X	X	X	X	X	X	X	X
AL140	-	-	X	-	X	X	-	-
AL340	-	-	-	-	-	X	-	-
MLA 1-25 H	-	X	X	-	X	X	X	-
MLA 3-35 H	-	-	-	-	-	X	X	-

	BS 1300 / 370 T	BS 1300 / 380 T	BS 1300 / 400 T	BS 1380 / 320 T	BS 1400 / 400 T	BS 1400 / 410 T	BS 1400 / 470 T
Heaped Capacity (l)	370	380	400	320	400	410	470
Overall height (mm)	626	675	732	470	626	675	732
Width (mm)	1300	1300	1300	1380	1400	1400	1400
Depth (mm)	907	822	907	841	907	822	907
Overall weight (kg)	151	174	196	137	158	187	210
Teeth	6	6	6	7	7	7	7
Flexible tube	No	No	No	No	No	No	No

Machines compatibility							
All-Tach® Narrow	**N004057**	**-**	**-**	**-**	**N004058**	**-**	**-**
All-Tach®	**-**	**N004082**	**N004085**	**N736005**	**-**	**N004083**	**N004086**
4 point Carriage	**N003057**	**N003082**	**N003085**	**-**	**N003058**	**N003083**	**N003086**
Euro Carriage	**N51502110**	**N50512157**	**N51502182**	**-**	**N51502111**	**N51502158**	**N51502183**
1050 R	-	-	-	X	-	-	-
1350 R NXT2	-	-	-	X	-	-	-
1350 RT	X	X	X	X	X	X	X
MLA 3-35 H	X	-	-	-	X	-	-
MLA 4-50 H	-	X	-	-	-	X	-

	BS 1480 / 340 T	BS 1500 / 440 T	BS 1500 / 510 T	BS 1520 / 350 T	BS 1550 / 360 T	BS 1650 / 730 T	BS 1680 / 400 T (a)
Heaped Capacity (l)	340	440	510	350	360	730	400
Overall height (mm)	470	675	732	470	470	730	450
Width (mm)	1480	1500	1500	1520	1550	1650	1680
Depth (mm)	841	822	907	841	841	1124	843
Overall weight (kg)	141	199	223	143	150	273	148
Teeth	7	7	7	7	7	8	8
Flexible tube	No	No	No	No	No	No	No

Machines compatibility							
All-Tach® Narrow	-	-	-	-	-	-	-
All-Tach®	N736062	N004084	N004091	N736006	N736066	N51502541	N747005
4 point Carriage	-	N003084	N003091	-	-	N51502612	-
Euro Carriage	-	N51502159	N51502184	-	-	N51502571	-
1050 R	X	-	-	-	-	-	-
1350 R NXT2	X	-	-	X	X	-	-
1350 RT	X	X	X	X	X	X	X
1500 R NXT2	-	-	-	-	-	-	X
1650 R	-	-	-	-	-	-	X
MLA 4-50 H	-	X	-	-	-	-	-
MLA 6-65 H-Z	-	-	-	-	-	X	-
MLA 7-75 H-Z	-	-	-	-	-	X	-

	BS 1680 / 400 T (b)	BS 1680 / 670 T	BS 1760 / 500 T	BS 1760 / 580 T	BS 1760 / 700 T	BS 1800 / 800 T	BS 1830 / 520 T
Heaped Capacity (l)	400	670	580	500	700	800	600
Overall height (mm)	450	600	501	502	600	730	501
Width (mm)	1680	1680	1760	1760	1760	1800	1830
Depth (mm)	843	1100	916	924	1100	1124	916
Overall weight (kg)	148	295	190	190	305	294	220
Teeth	8	8	8	8	8	9	9
Flexible tube	No	No	No	No	No	No	No

Machines compatibility							
All-Tach® Narrow	-	-	-	-	-	-	-
All-Tach®	N51502459	N51502025	N51502460	N748002	N51502026	N51502540	N51502462
4 point Carriage	-	-	-	-	-	N51502615	-
Euro Carriage	-	-	-	-	-	N51502574	-
1350 RT	X	X	X	X	X	X	X
1500 R NXT2	-	-	-	X	-	-	-
1650 R	-	-	-	X	-	-	-
1750 RT NXT:3	-	X	-	-	X	-	-
1900 R	X	-	X	-	-	-	-
2200 R	-	-	X	-	-	-	X
2600 R	-	-	-	-	-	-	X
2700 V NXT:2	-	-	-	X	-	-	-
MLA 6-65 H-Z	-	-	-	-	-	X	-
MLA 7-75 H-Z	-	-	-	-	-	X	-

	BS 1830 / 600 T	BS 1850 / 740 T	BS 1880 / 750 T	BS 1950 / 860 T	BS 2140 / 870 T (a)	BS 2140 / 870 T (b)	BS 2150 / 950 T
Heaped Capacity (l)	520	740	750	870	870	870	960
Overall height (mm)	502	600	600	730	600	600	730
Width (mm)	1830	1850	1880	1950	2140	2140	2150
Depth (mm)	924	1100	1100	1124	1100	1100	1124
Overall weight (kg)	206	315	315	309	320	230	344
Teeth	9	9	9	9	11	11	11
Flexible tube	No	No	No	No	No	No	No

Machines compatibility							
All-Tach® Narrow	-	-	-	-	-	-	-
All-Tach®	N757074	N51502027	N51502072	N51502539	N700245	N51502028	N51502538
4 point Carriage	-	-	-	N51502619	-	-	N51502621
Euro Carriage	-	-	-	N51502578	-	-	N51502580
1350 RT	X	X	X	X	X	X	X
1750 RT NXT:3	-	X	-	-	-	-	-
2100 RT NXT:3	-	X	-	-	-	X	-
2600 R	-	-	X	-	-	-	-
2700 V NXT:2	X	-	-	-	-	-	-
3300 V NXT:2	-	-	X	-	X	-	-
4200 V	-	-	-	-	X	-	-
MLA 6-65 H-Z	-	-	-	X	-	-	-
MLA 7-75 H-Z	-	-	-	X	-	-	X

STANDARD DIGGING BUCKET WITH WEAR PLATE (COMPACT MACHINES)

- Wear plates under the bucket.
- 400HB cutting edge & 400HB side blades for more resistance.
- Heavy duty construction.

	BS WP 1650 / 730	BS WP 1800 / 800	BS WP 1950 / 860	BS WP 2150 / 950
Heaped Capacity (l)	730	800	870	960
Overall height (mm)	730	730	730	730
Width (mm)	1650	1800	1950	2150
Depth (mm)	1171	1171	1171	1171
Overall weight (kg)	302	325	343	381
Flexible tube	No	No	No	No

Machines compatibility				
All-Tach®	**N51502545**	**N51502544**	**N51502543**	**N51502542**
4 point Carriage	**N51502613**	**N51502616**	**N51502618**	**N51502622**
Euro Carriage	**N51502572**	**N51502575**	**N51502577**	**N51502581**
MLA 6-65 H-Z	X	X	X	-
MLA 7-75 H-Z	X	X	X	X

SUGAR BEET BUCKET

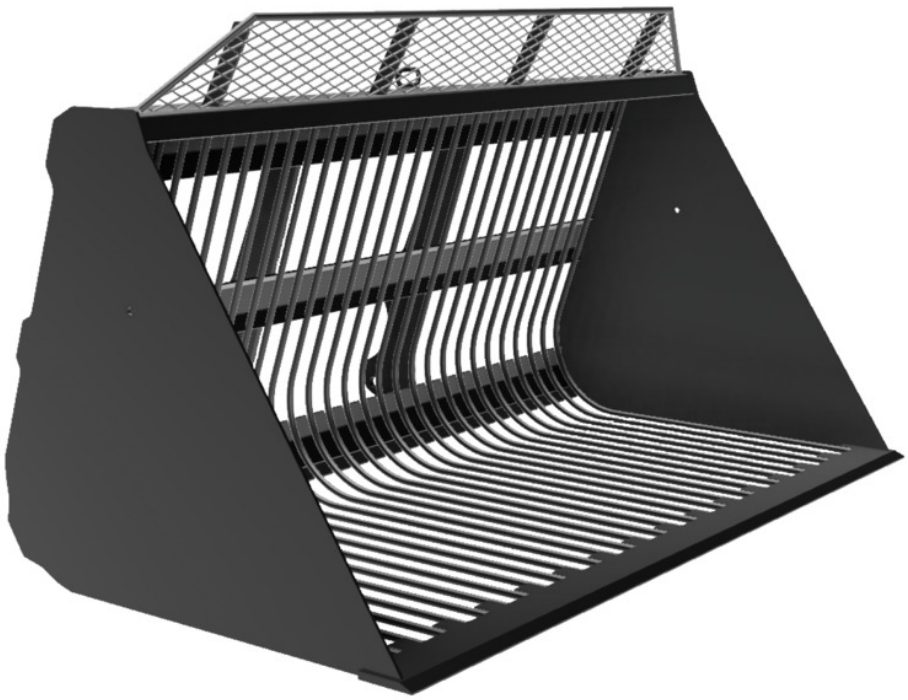

- Openwork structure made of Ø 20 mm steel bars.
- Bars spread 60 mm, perfect for sugar beets.
- Plain sides.
- Maximal density of the transported product: 700 kg/m3.
- Perfectly adapted to the handling of sugar beets and other root crops & tubercules by scooping the beet and leaving the soil behind.
- Openwork spill guard for a better visibility.
- Strong structure for long lasting use.
- Not adapted to earthwork or stone handling.

	BSB 2450 / 2500
Capacity (kg)	1390
Heaped Capacity (l)	2500
Overall height (mm)	1380
Width (mm)	2450
Length (mm)	1375
Depth (mm)	1280
Overall weight (kg)	520
Machine Equipement	X

Machines compatibility	
Reference number	**757953**
MLT 737-130 PS+	X
MLT 737-130 PS+ ST4	X
MLT 840-145 PS+	X
MLT 841-145 PS+	X
MLT 1040-145 PS+ L	X
MLT 1041-145 PS+L	X
MLT-X 732	X
MLT-X 735 T LSU	X
MLT-X 737-130 PS+	X
MLT-X 840-140 PS+	X
MLT-X 841 - 145 PS+	X
MLT-X 1040-140 PS+ L	X
MLT-X 1041-145 PS+L	X

MANDATORY MACHINE EQUIPMENT: X

UTILITY BUCKET (COMPACT MACHINES)

- Increased capacity for materials with a medium density (<1,5t/m3).
- Strong construction for intensive loading applications.
- 400HB wear plate & side plates.
- Versatile bucket, especially interesting for rental operations.

	BU 920 / 210	BU 1080 / 250	BU 1380 / 380	BU 1680 / 590	BU 1760 / 690	BU 1760 / 740
Heaped Capacity (l)	210	250	380	590	690	740
Overall height (mm)	463	463	524	572	645	670
Width (mm)	920	1080	1380	1680	1760	1760
Depth (mm)	889	889	889	948	952	960
Overall weight (kg)	58	60	146	250	255	210
Flexible tube	No	No	No	No	No	No

Machines compatibility						
All-Tach®	N726006	N726007	N736011	N747008	N757009	N51502466
850 R	X	X	-	-	-	-
1050 R	-	-	X	-	-	-
1350 R NXT2	-	-	X	X	-	-
1350 RT	-	-	X	X	-	-
1500 R NXT2	-	-	-	X	X	-
1650 R	-	-	-	X	X	-
1900 R	-	-	-	X	-	X
2200 R	-	-	-	-	-	X
2700 V NXT:2	-	-	-	-	X	-

	BU 1830 / 720	BU 1830 / 780	BU 1880 / 900	BU 2080 / 1010	BU 2140 / 1050 (a)	BU 2140 / 1050 (b)
Heaped Capacity (l)	720	780	900	1010	1050	1050
Overall height (mm)	645	670	732	732	732	732
Width (mm)	1830	1830	1880	2080	2140	2140
Depth (mm)	952	960	1055	1055	1055	1055
Overall weight (kg)	260	225	360	370	378	378
Flexible tube	No	No	No	No	No	No

Machines compatibility						
All-Tach®	N757010	N51502467	N51502074	N51502075	N700247	N51502036
2150 RT	-	-	-	-	-	X
2200 R	-	X	-	-	-	-
2600 R	-	X	X	-	-	-
2700 V NXT:2	X	-	-	-	-	-
3300 V NXT:2	-	-	X	X	X	-
4200 V	-	-	-	X	X	-

CLAMPS

Range

101 Bale clamp classic
104 Bale clamp high intensive NEW
106 Bale Clamp Intensive
108 Bale Clamp Super Compact
110 Mixed Bale Clamp
112 Pot clamp
114 Pot Clamp (Compact machines)
116 Rib handling clamp
118 Round Bale Clamp (Compact machines)
120 Square Bale Clamp
122 Square wrapped bale clamp
124 Square wrapped bale clamp (Compact machines)
126 Wrapped Bale Clamp
128 Wrapped Bale Clamp (Compact machines)

BALE CLAMP CLASSIC

- 2x4 or 2x3 teeth.
- Synchronized closure.
- Excellent lifting capacity of 1000 or 1200 kg at 800 mm.
- Handles 1 round bales Ø 1.8 m max. for the 2x4 and Ø 1.5 to 2 m for the 2x3.
- Handles 2 rectangular bales of maximum 0.8 m high per bale.
- Easy to use and efficient attachment.
- Handles 1 round bale or 2 rectangular bales at the same time.
- Rounded teeth in wrought iron that offer an accurate and clean penetration on materials.
- Optional: 2 lower teeth (680 mm, Ø 35 mm) that ensure a perfect stability while handling rectangular bales.

	CLBR 2x3	PBG 2x4
Capacity (kg)	1200	1000
Forks length (mm)	335	-
Overall height (mm)	1382	1381
Width (mm)	1090	1300
Length (mm)	1082	1031
Overall weight (kg)	235	262
Arm length (mm)	700	600
Machine Equipement		
Hydraulic system	Yes	Yes
Teeth / Fingers	2 / 3	2 / 4
Opening minimum (mm)	186	112
Opening maximum (mm)	1960	1776
Fork spread minimum (mm)	335	-
Fork spread maximum (mm)	335	-

Machines compatibility		
Reference number	52001013	757612
MLA-T 533-145 V+ - ST5	X	X
MLT 625-75 H	X	X
MLT 630-105 ST4	X	X
MLT 630-105 V CP ST4	X	X
MLT 630-105 V ST4	X	X
MLT 630-115	X	X
MLT 630-115 V	X	X
MLT 630-115 V CP	X	X
MLT 730-115 V	X	X
MLT 730-115 V CP	X	X
MLT 730-115 V CP ST4	X	X
MLT 733-115 ST4	X	X
MLT 737-130 PS+ ST4	X	X
MLT 840-145 PS+	X	X
MLT 841-145 PS+	X	X
MLT 845-100 H	X	X
MLT 845-120	X	X
MLT 961-145 V+ L	X	X
MLT 961-160 V+ L	X	X
MLT 1040-145 PS+ L	X	X
MLT 1041-145 PS+L	X	X
MLT-X 625-75 H	X	X
MLT-X 732	X	X
MLT-X 735 T LSU	X	X
MLT-X 737-130 PS+	X	X
MLT-X 840-140 PS+	X	X
MLT-X 841 - 145 PS+	X	X
MLT-X 845-120	X	X
MLT-X 845-120 H	X	X

	CLBR 2x3	PBG 2x4
Machines compatibility		
MLT-X 961-145 V+ L	X	X
MLT-X 961-160 V+ L	X	X
MLT-X 1040-140 PS+ L	X	X
MLT-X 1041-145 PS+L	X	X

MANDATORY MACHINE EQUIPMENT:

NEW

BALE CLAMP HIGH INTENSIVE

- 2x6 teeth.
- Synchronized closure.
- Excellent lifting capacity of 2000 kg at 800 mm or 2500 with optional lower tines.
- Handles 1 round bales Ø 1.8 m max. for the 2x4 and Ø 1.5 to 2 m for the 2x3.
- Handles 2 rectangular bales of maximum 0.8 m high per bale.
- Easy to use and efficient attachment.
- Handles up to 2 round bales or 3 rectangular bales at the same time.
- Rounded teeth in wrought iron that offer an accurate and clean penetration on materials.

	CLBR 2x6
Capacity (kg)	2000
Forks length (mm)	335
Overall height (mm)	2256
Width (mm)	1002
Length (mm)	1276
Overall weight (kg)	434
Arm length (mm)	700
Machine Equipement	
Hydraulic system	Yes
Teeth / Fingers	2 / 6
Opening minimum (mm)	186
Opening maximum (mm)	1960

Machines compatibility	
Reference number	**757666**
MLT 635-130 PS+	X
MLT 635-140 V+	X
MLT 733-115	X
MLT 733-115 LSU	X
MLT 733-115 ST4	X
MLT 737-130 PS+ ST4	X
MLT 741-130 PS+	X
MLT 741-140 V+	X
MLT 840-145 PS+	X
MLT 841-145 PS+	X
MLT 940-140 V+	X
MLT 1040-145 PS+ L	X
MLT 1041-145 PS+L	X
MLT-X 737-130 PS+	X
MLT-X 741-140 V+	X
MLT-X 840-140 PS+	X
MLT-X 841 - 145 PS+	X
MLT-X 1040-140 PS+ L	X
MLT-X 1041-145 PS+L	X

MANDATORY MACHINE EQUIPMENT:

BALE CLAMP INTENSIVE

- Rounded forged 2x4 teeth.
- Synchronized closure.
- Impressive lifting capacity of 1800 kg.
- Handles 1 or 2 round bales: 1.80 m maximum.
- Handles 2 rectangular bale: 1.2 m high.
- Handles 3 rectangular bales: 0.8 m high each.
- Optional: 2 lower tines 680 mm Ø 35 mm ref. 790521 - spare parts kit.
- Easy and clean handling.
- Time-saver and competitive attachment.
- Handles 2 round bales or 3 rectangular bales at the same time.
- Perfect stability while handling square bales with optional lower tines.

	Lower Tines	P2BG 2x4
Capacity (kg)	-	1800
Overall height (mm)	-	1776
Width (mm)	-	1090
Length (mm)	680	1047
Overall weight (kg)	35	283
Diameter (mm)	35	-
Arm length (mm)	-	600
Cable loop	-	1
Machine Equipement	-	
Teeth / Fingers	2	2 / 4
Opening minimum (mm)	-	150
Opening maximum (mm)	-	1770

Machines compatibility		
Reference number	**790521**	**790518**
MLT 630-105 ST4	X	X
MLT 630-105 V CP ST4	X	X
MLT 630-105 V ST4	X	X
MLT 630-115	X	X
MLT 630-115 V	X	X
MLT 630-115 V CP	X	X
MLT 730-115 V	X	X
MLT 730-115 V CP	X	X
MLT 730-115 V CP ST4	X	X
MLT 733-115 ST4	X	X
MLT 737-130 PS+ ST4	X	X
MLT 840-145 PS+	X	X
MLT 841-145 PS+	X	X
MLT 961-145 V+ L	X	X
MLT 961-160 V+ L	X	X
MLT 1040-145 PS+ L	X	X
MLT 1041-145 PS+L	X	X
MLT-X 732	X	X
MLT-X 735 T LSU	X	X
MLT-X 737-130 PS+	X	X
MLT-X 840-140 PS+	X	X
MLT-X 841 - 145 PS+	X	X
MLT-X 961-145 V+ L	X	X
MLT-X 961-160 V+ L	X	X
MLT-X 1040-140 PS+ L	X	X
MLT-X 1041-145 PS+L	X	X

MANDATORY MACHINE EQUIPMENT:

BALE CLAMP SUPER COMPACT

- 2x2 teeth
- Non-synchronized closure
- Capacity: 800kg
- Handles 1 round bale - Ø 1.8 m maximum
- Handles 1 rectangular bale - 1.2 m high.
- Easy to use and durable attachment
- Very compact clamp - ideal for under roof stacking
- Rounded teeth in wrought iron that offer an accurate and clean penetration on materials.

	PBG 2x2
Capacity (kg)	800
Forks length (mm)	1000
Overall height (mm)	3010
Width (mm)	1800
Length (mm)	1590
Overall weight (kg)	760
Arm length (mm)	500
Machine Equipement	
Teeth / Fingers	14 / 3
Opening minimum (mm)	420
Opening maximum (mm)	1570

Machines compatibility	
Reference number	**757639**
MLT 625-75 H	X
MLT 630-105 ST4	X
MLT 630-105 V CP ST4	X
MLT 630-105 V ST4	X
MLT 630-115	X
MLT 630-115 V	X
MLT 630-115 V CP	X
MLT 730-115 V	X
MLT 730-115 V CP	X
MLT 730-115 V CP ST4	X
MLT 737-130 PS+ ST4	X
MLT 840-145 PS+	X
MLT 841-145 PS+	X
MLT 845-100 H	X
MLT 845-120	X
MLT 1040-145 PS+ L	X
MLT 1041-145 PS+L	X
MLT-X 625-75 H	X
MLT-X 735 T LSU	X
MLT-X 737-130 PS+	X
MLT-X 840-140 PS+	X
MLT-X 841 - 145 PS+	X
MLT-X 845-120	X
MLT-X 845-120 H	X
MLT-X 1040-140 PS+ L	X
MLT-X 1041-145 PS+L	X

MANDATORY MACHINE EQUIPMENT:

MIXED BALE CLAMP

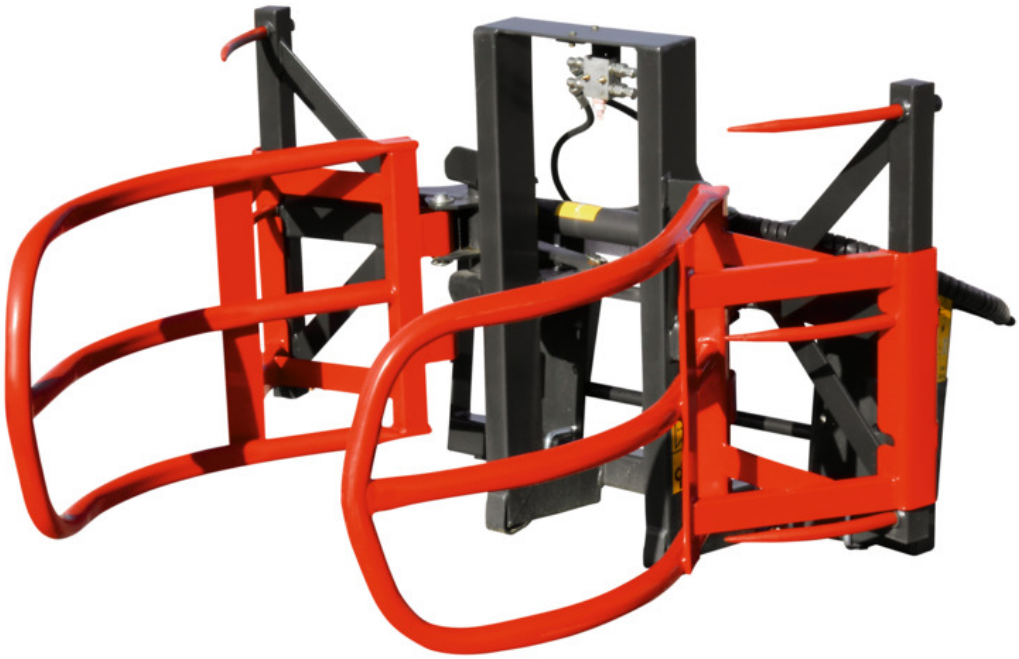

- 2 x 3 teeth.
- Switch from a synchronized to an unsynchronized closure.
- Very good lifting capacity up to 800 kg.
- Handles round wrapped bales: Ø from 1 m to 1.60 m.
- Handles round bales with Ø from 0.9 m to 1.80 m.
- Handles 2 rectangular bales: 1.2 m high each.
- Versatile: 2 in 1 attachment.
- Handles rectangular and round bales as well as wrapped bales.
- Easy to use: from one attachment to another in less than 3 minutes.
- Handles up to 2 bales.
- Innovative: easy hitching system (no tools, no dismantling).

	MBC 2x3
Capacity (kg)	800
Fork spread (mm)	375
Overall height (mm)	1084
Width (mm)	1196
Length (mm)	1454
Overall weight (kg)	290
Machine Equipement	
Teeth / Fingers	2 / 3
Opening minimum (mm)	420
Opening maximum (mm)	1570

Machines compatibility	
Reference number	**790506**
MLT 625-75 H	X
MLT 630-105 ST4	X
MLT 630-105 V CP ST4	X
MLT 630-105 V ST4	X
MLT 630-115	X
MLT 630-115 V	X
MLT 630-115 V CP	X
MLT 730-115 V	X
MLT 730-115 V CP	X
MLT 730-115 V CP ST4	X
MLT 733-115 ST4	X
MLT 737-130 PS+ ST4	X
MLT 840-145 PS+	X
MLT 841-145 PS+	X
MLT 845-100 H	X
MLT 845-120	X
MLT 961-145 V+ L	X
MLT 961-160 V+ L	X
MLT 1040-145 PS+ L	X
MLT 1041-145 PS+L	X
MLT-X 625-75 H	X
MLT-X 732	X
MLT-X 735 T LSU	X
MLT-X 737-130 PS+	X
MLT-X 840-140 PS+	X
MLT-X 841 - 145 PS+	X
MLT-X 845-120	X
MLT-X 845-120 H	X
MLT-X 961-145 V+ L	X
MLT-X 961-160 V+ L	X
MLT-X 1040-140 PS+ L	X
MLT-X 1041-145 PS+L	X

MANDATORY MACHINE EQUIPMENT:

POT CLAMP

- Articulated handles for a smooth pot clamping.
- Adjustable pressure limiter to prevent from damaging fragile pots (terracotta).
- Increased component protection & simplified maintenance.
- Handles pot with maximum diameter of 1.2 m.
- Makes the handling of pots and plants in pots easy and efficient.
- Efficiently replaces forks, jibs or human strength.
- Wide opening & high capacity to adapt to many pot types.

	CLP 1000 / 800
Capacity (kg)	800
Overall height (mm)	507
Width (mm)	1324
Length (mm)	1030
Overall weight (kg)	109
Machine Equipement	
Opening minimum (mm)	400
Opening maximum (mm)	1000

Machines compatibility	
Reference number	**914770**
MLA 3-35 H	X
MLT 625-75 H	X
MLT-X 625-75 H	X
MT 420 H	X
MT 625 HA	X
MT-X 625 H	X

MANDATORY MACHINE EQUIPMENT:

POT CLAMP (COMPACT MACHINES)

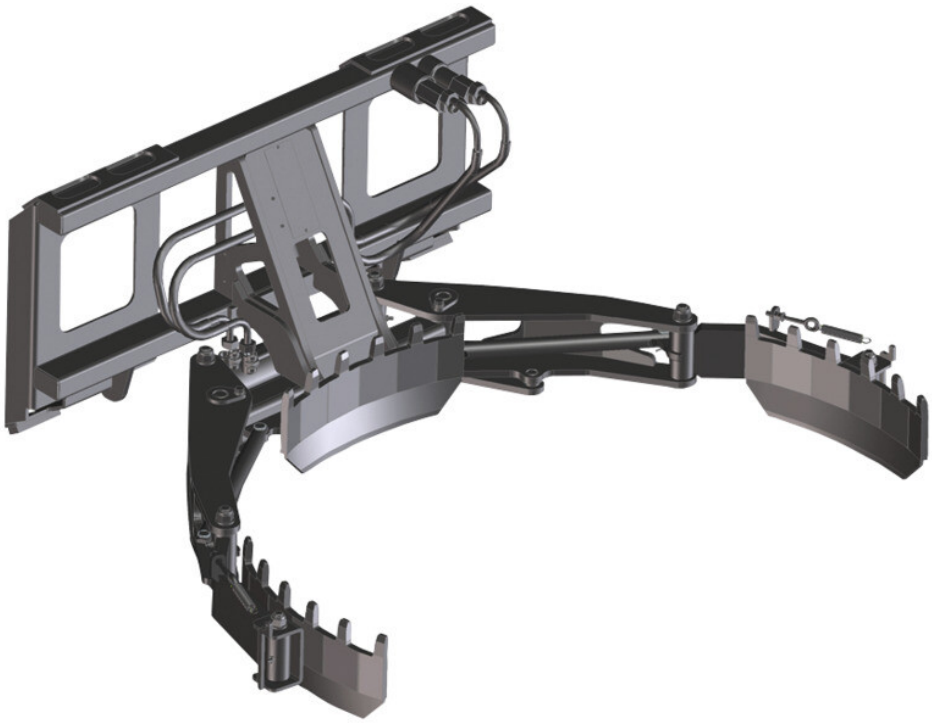

- Articulated handles for a smooth pot clamping.
- Adjustable pressure limiter to prevent from damaging fragile pots (terracotta).
- Makes the handling of pots and plants easy and efficient.
- Efficiently replaces forks, jibs or human strength.

	CLP 1000 / 800
Capacity (kg)	800
Overall height (mm)	507
Overall weight (kg)	109
Opening minimum (mm)	400
Opening maximum (mm)	1000

Machines compatibility	
All-Tach® Narrow	**N51502717**
All-Tach®	**N51502716**
MLA 1-25 H	X
MLA 3-35 H	X
MLA 4-50 H	X
MLA 6-65 H-Z	X
MLA 7-75 H-Z	X

RIB HANDLING CLAMP

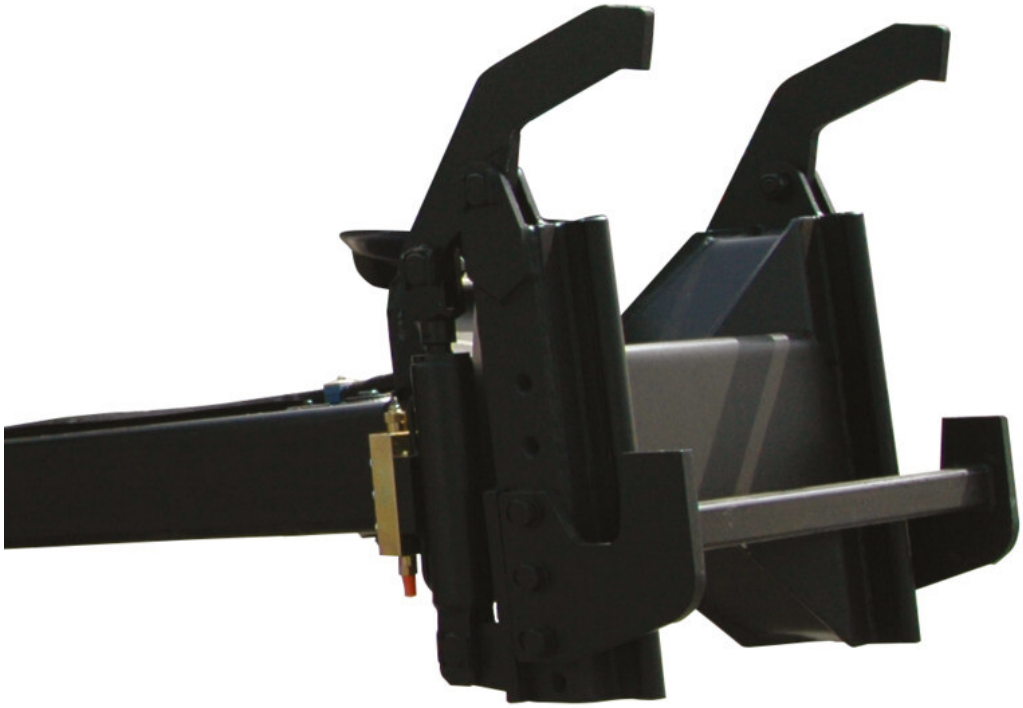

- Capacity 2000 kg or 4000 kg.
- 45° hydraulic arm movement.
- 65°/65° manual head rotation.
- Wide hydraulic clamp opening: min/ beam width 120 mm, max. 450 mm.
- Note: 906734 ref is equipped with cab and radio control steering. 882008 if cab steering only.
- Note: dedicated machine option required.

- MRT Vision/ Vision+: no machine equipment required.
- MRT Vision/ Vision+: adaptation plug required to use and older model on the machines. Contact the spare part department.

- THE clamp for all rib handlings & placements.
- Efficient & accurate rib placement.
- Safety: prevents from suspending ribs on forks or hooks.
- To be controled from the machine's cab or with a remote control.
- Note: rib placement with a vertical attachment only. Ribs can be grabbed on the ground using the machine's titling.

	CLR 4000
Capacity (kg)	4000
Overall weight (kg)	760
Arm length (mm)	1517
Machine Equipement	
Opening minimum (mm)	203
Opening maximum (mm)	480
Rotation 1	45
Rotation 2	130

Machines compatibility	
Reference number	**923970**
Reference number E-RECO	**53027173**
Reference number E-RECO 2	**52721819**
MRT 1645 75	X
MRT 1645 115	X
MRT 1845 75	X
MRT 1845 115	X
MRT 2145 115	X
MRT 2260	X
MRT 2470 Privilege Plus	X
MRT 2545 115	X
MRT 2570	X
MRT 2660	X
MRT 3050 Privilege Plus	X
MRT 3060	X
MRT 3570	X
MRT 3570 ES	X
MRT-X 1645	X
MRT-X 1845	X
MRT-X 2145	X
MRT-X 2260	X
MRT-X 2470 Privilege Plus	X
MRT-X 2545	X
MRT-X 2570	X
MRT-X 2660	X
MRT-X 3050 Privilege Plus	X
MRT-X 3060	X
MRT-X 3570	X
MRT-X 3570 ES	X

MANDATORY MACHINE EQUIPMENT:

ROUND BALE CLAMP (COMPACT MACHINES)

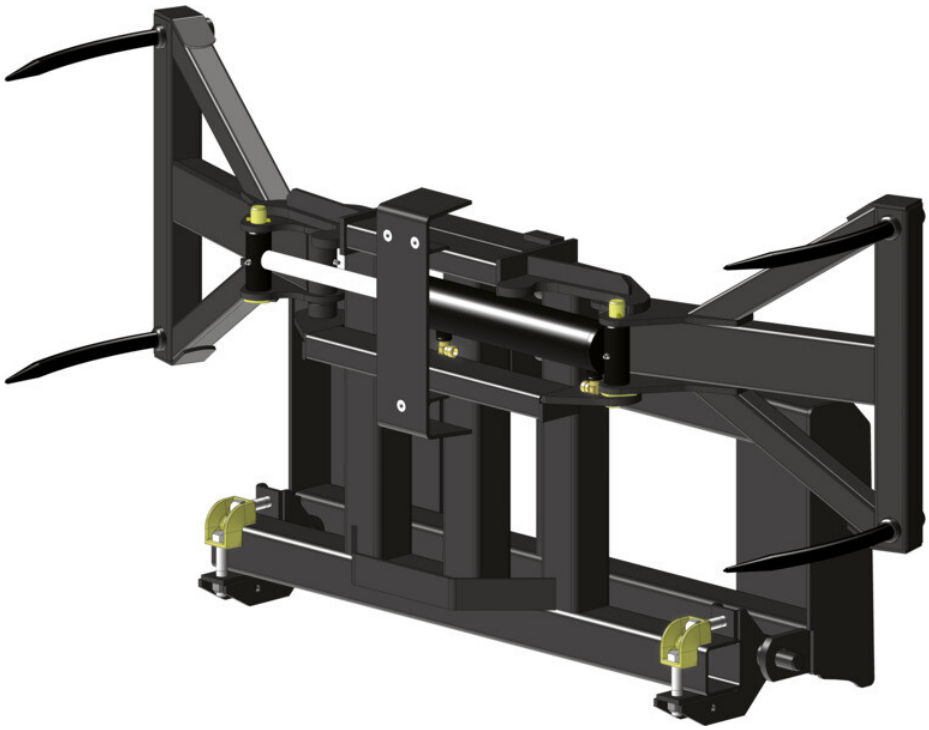

- Can be used for square bales.
- Synchronized arms with 4 forged teeth each.
- Attachment designed for the handling of rond bales.
- Allows an easy and clean handling

	CLBR 2x2 / 800
Capacity (kg)	800
Overall height (mm)	869
Overall weight (kg)	176
Machine Equipement	
Opening maximum (mm)	1583
Fork spread minimum (mm)	150

Machines compatibility	
All-Tach® Narrow	**N51502696**
All-Tach®	**N51502631**
4 point Carriage	**N51502632**
Euro Carriage	**N51502633**
MLA 1-25 H	X
MLA 3-35 H	X
MLA 4-50 H	X
MLA 6-65 H-Z	X
MLA 7-75 H-Z	X

SQUARE BALE CLAMP

- Capacity: 2100 kg / 5 bales (700 mm high).
- Reinforced frame & grab structure for harsh working conditions.
- 2x 7 forged teeth, Ø 25 mm length 340 mm.
- 3x lower tines, Ø 40 mm length 1000 mm.
- Synchronized closure.
- High capacity & power for intensive straw stacking
- Lateral clamp kinematics: under roof stacking made easy
- Good bale penetration & upholding
- Possible handling & rotation of a single bale.

	CLBS 2x7 / 2100
Capacity (kg)	2100
Width (mm)	1800
Overall weight (kg)	760
Machine Equipement	
Teeth / Fingers	14 / 3
Opening minimum (mm)	420
Opening maximum (mm)	1570
3 Round bale max diameter (mm)	1800
3 Square bale max height (mm)	1200

Machines compatibility	
Reference number	**52000015**
MLT 840-145 PS+	X
MLT 841-145 PS+	X
MLT 845-100 H	X
MLT 845-120	X
MLT 961-145 V+ L	X
MLT 961-160 V+ L	X
MLT 1040-145 PS+ L	X
MLT 1041-145 PS+L	X
MLT-X 840-140 PS+	X
MLT-X 841 - 145 PS+	X
MLT-X 961-145 V+ L	X
MLT-X 961-160 V+ L	X
MLT-X 1040-140 PS+ L	X
MLT-X 1041-145 PS+L	X

MANDATORY MACHINE EQUIPMENT:

SQUARE WRAPPED BALE CLAMP

- Strong frame & components for intensive applications.
- Telescopic kinematics, smooth movement & strong clamping capacity.
- General use of Teflon® pads - Limited maintenance.
- Standard pressure limiter.
- Tubular structure, no risk of damaging the film when moving wrapped bales.
- Wide clamp opening for big or multiple bale handling.
- Superior component protection.
- Multi-task: designed for wrapped square bales, can also handle standard square bales or round bales.

	CLBSW 2000 / 1000
Capacity (kg)	1000
Overall height (mm)	679
Width (mm)	1525
Length (mm)	1849
Overall weight (kg)	483
Arm length (mm)	1000
Machine Equipement	
Opening minimum (mm)	740
Opening maximum (mm)	2090

Machines compatibility	
Reference number	**52000812**
MLT 625-75 H	X
MLT 630-105 ST4	X
MLT 630-105 V CP ST4	X
MLT 630-105 V ST4	X
MLT 630-115	X
MLT 630-115 V	X
MLT 630-115 V CP	X
MLT 730-115 V	X
MLT 730-115 V CP	X
MLT 730-115 V CP ST4	X
MLT 733-115 ST4	X
MLT 737-130 PS+ ST4	X
MLT 840-145 PS+	X
MLT 841-145 PS+	X
MLT 961-145 V+ L	X
MLT 961-160 V+ L	X
MLT 1040-145 PS+ L	X
MLT 1041-145 PS+L	X
MLT-X 625-75 H	X
MLT-X 735 T LSU	X
MLT-X 737-130 PS+	X
MLT-X 840-140 PS+	X
MLT-X 841 - 145 PS+	X
MLT-X 961-145 V+ L	X
MLT-X 961-160 V+ L	X
MLT-X 1040-140 PS+ L	X
MLT-X 1041-145 PS+L	X

MANDATORY MACHINE EQUIPMENT:

SQUARE WRAPPED BALE CLAMP (COMPACT MACHINES)

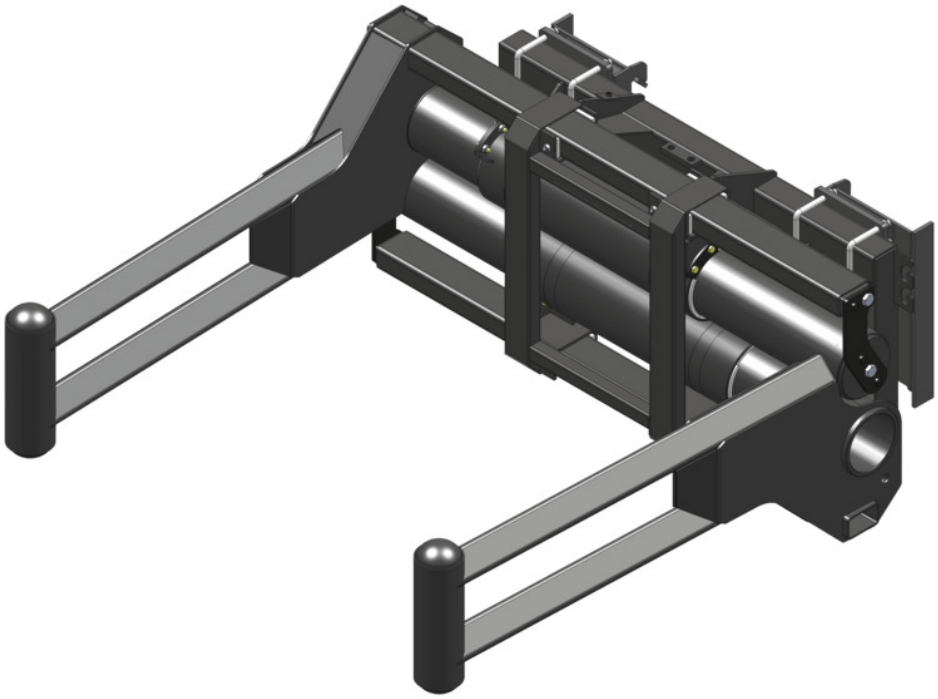

- Strong frame & components for intensive applications.
- Telescopic cinematics-smooth movement & strong clamping capacity.
- Massive use of Teflon® pad.
- Limited maintenance.
- Standard pressure limiter.
- Tubular structure- no risk of damaging the film when moving wrapped bales.
- Wide clamp opening for big or multiple bale handling.
- Superior component protection.
- Multi-task: designed for wrapped square bales, can also handle standard square bales or round bales.

	CLBSW 2000 / 1000
Capacity (kg)	1000
Overall height (mm)	679
Overall weight (kg)	477
Arm length (mm)	1811
Machine Equipement	
Opening minimum (mm)	740
Opening maximum (mm)	2090

Machines compatibility	
All-Tach®	**N51502694**
4 point Carriage	**N51502693**
Euro Carriage	**N51502692**
MLA 6-65 H-Z	X
MLA 7-75 H-Z	X

WRAPPED BALE CLAMP

- Self-lubricated anti-wear ring that improves the longevity of the attachment.
- Excellent lifting capacity from 800 kg up to 1000 kg.
- Welded monobloc chassis.
- CLBW 800 : handles wrapped bale with Ø from 0.85 m to 1.45 m.
- CLBW 1500 : handles wrapped bale with Ø from 1 m to 1.7 m.
- Easy to use and competitive attachment.
- Powerful double effect cylinder allows the manipulation of very heavy bales.
- Rounded and articulated clamp designed to fit the shape of every bale.
- Smooth structure that avoids any perforation of plastic film.

	CLBW 800	CLBW 1500
Capacity (kg)	800	1500
Overall height (mm)	810	810
Width (mm)	1587	1587
Length (mm)	1386	1490
Overall weight (kg)	227	251
Machine Equipement		
Hydraulic system	Yes	Yes
Opening minimum (mm)	820	510
Opening maximum (mm)	1503	1846

Machines compatibility		
Reference number	**52000813**	**52001012**
MLT 625-75 H	X	X
MLT 630-105 ST4	X	X
MLT 630-105 V CP ST4	X	X
MLT 630-105 V ST4	X	X
MLT 630-115	X	X
MLT 630-115 V	X	X
MLT 630-115 V CP	X	X
MLT 730-115 V	X	X
MLT 730-115 V CP	X	X
MLT 730-115 V CP ST4	X	X
MLT 733-115 ST4	X	X
MLT 737-130 PS+ ST4	X	X
MLT 840-145 PS+	X	X
MLT 841-145 PS+	X	-
MLT 961-145 V+ L	X	X
MLT 961-160 V+ L	X	-
MLT 1040-145 PS+ L	X	X
MLT 1041-145 PS+L	X	-
MLT-X 625-75 H	X	X
MLT-X 732	X	X
MLT-X 735 T LSU	X	X
MLT-X 737-130 PS+	X	X
MLT-X 840-140 PS+	X	X
MLT-X 841 - 145 PS+	X	-
MLT-X 961-145 V+ L	X	X
MLT-X 961-160 V+ L	X	-
MLT-X 1040-140 PS+ L	X	X
MLT-X 1041-145 PS+L	X	-

MANDATORY MACHINE EQUIPMENT:

WRAPPED BALE CLAMP (COMPACT MACHINES)

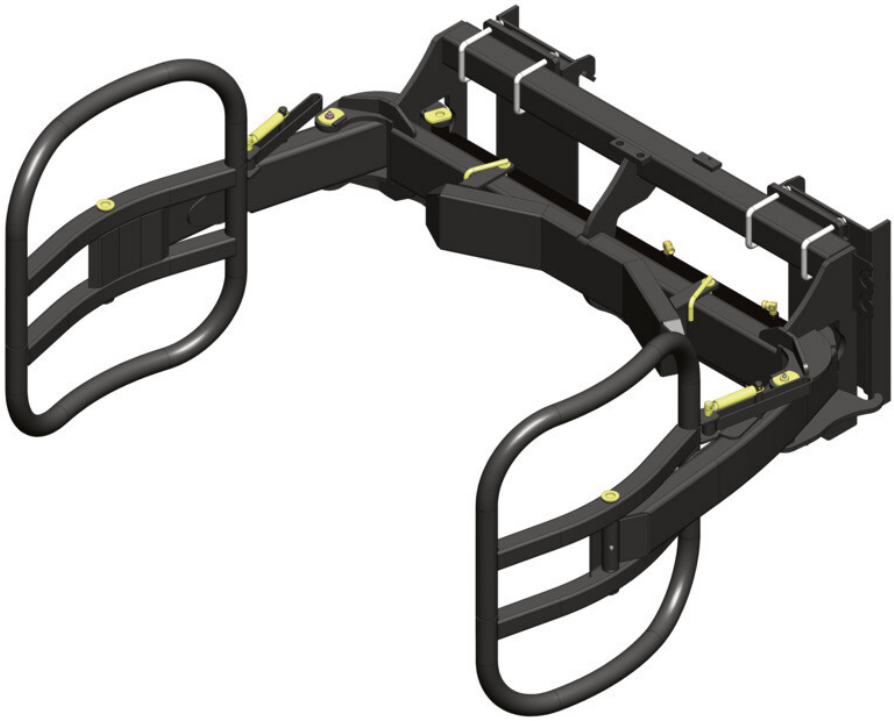

- Self-lubricated anti-wear ring that improves the longevity of the attachment.
- Excellent lifting capacity up to 1000 kg.
- Welded monobloc chassis.
- Handles wrapped bale with diameter from 1 m to 1,7 m.
- Easy to use and competitive attachment.
- Powerful double effect cylinder allows the manipulation of very heavy bales.
- Rounded and articulated clamp designed to fit the shape of every bale.
- Smooth structure that avoids any perforation of plastic film.

	CLBW 800
Capacity (kg)	800
Overall height (mm)	810
Overall weight (kg)	227
Machine Equipement	
Opening minimum (mm)	820
Opening maximum (mm)	1053

Machines compatibility	
All-Tach® Narrow	**N51502697**
All-Tach®	**N51502013**
4 point Carriage	**N51502429**
Euro Carriage	**N51502430**
MLA 3-35 H	X
MLA 4-50 H	X

ON FORK HANDLING SOLUTIONS

Range

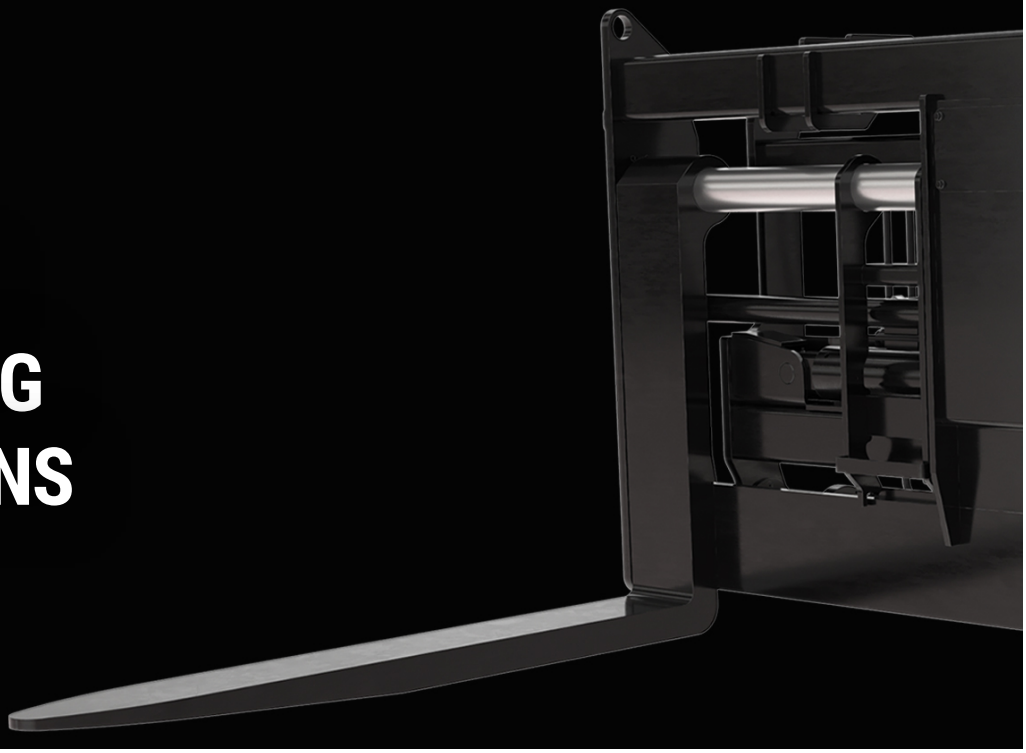

131 360° Rotating Fork Carriage
133 Competitive Carriage Interface
135 Floating Fork Carriage with Hydraulic Leveling
138 Floating Forks Carriage
140 Heavy Duty Floating Fork Positioners
142 Hydraulic Floating Fork Positioner
144 Pallet Forks Carriage (Compact machines)
147 Tilting & Slewing Forks Carriage
149 Tilting Fork Carriage (MRT - MHT) NEW
155 Tilting Fork Carriage With Side Shift (MRT - MHT) NEW
159 Tilting Forks Carriage

360° ROTATING FORK CARRIAGE

- Major increase of your MRT's functionality thanks to a continuous 360° fork rotation.
- 2 capacities: 4000 kg frontal (+/- 15°) and 2500 kg rotated.
- Note: road circulation kit mandatory in Italy. Contact your dealer.
- Note: road circulation kit mandatory in Germany on MRT Vision/ Vision+. Contact your dealer.
- Easy handling of long loads in narrow spaces.
- Space saving: better pallet management= less storage space used.
- Reduce machine movements & manoeuvres = Fuel consumption savings.
- Safety: constant monitoring of the load's weight, angle & position ; adaptative overload control according to the load's position; no forward tilting if rotation > 120° and boom lifted over 3m high.
- Cost saving: limits machine movements & manoeuvres = lower fuel consumption.
- Space saving: better pallet management= less storage space used.

	CAT 1200 / 4000 R
Capacity (kg)	4000
Max. capacity in front (15°/15°) (kg)	4000
Max Capacity in Rotation (360°) (kg)	2500
Overall length (mm)	2210
Forks width X Forks length X Forks section (mm)	125 X 1200 X 50
Overall height (mm)	1190
Width (mm)	1290
Overall weight (kg)	730
Machine Equipement	
Hydraulic system	Yes
Forks	2
Carriage type	Manitou

Machines compatibility	
Reference number	**53026525**
MRT 2150 Privilege Plus	X
MRT 2260	X
MRT 2470 Privilege Plus	X
MRT 2550 Privilege Plus	X
MRT 2570	X
MRT 2660	X
MRT 3050 Privilege Plus	X
MRT 3060	X
MRT 3570	X
MRT 3570 ES	X
MRT-X 2150 Privilege Plus	X
MRT-X 2260	X
MRT-X 2470 Privilege Plus	X
MRT-X 2550 Privilege Plus	X
MRT-X 2570	X
MRT-X 2660	X
MRT-X 3050 Privilege Plus	X
MRT-X 3060	X
MRT-X 3570	X
MRT-X 3570 ES	X

MANDATORY MACHINE EQUIPMENT:

COMPETITIVE CARRIAGE INTERFACE

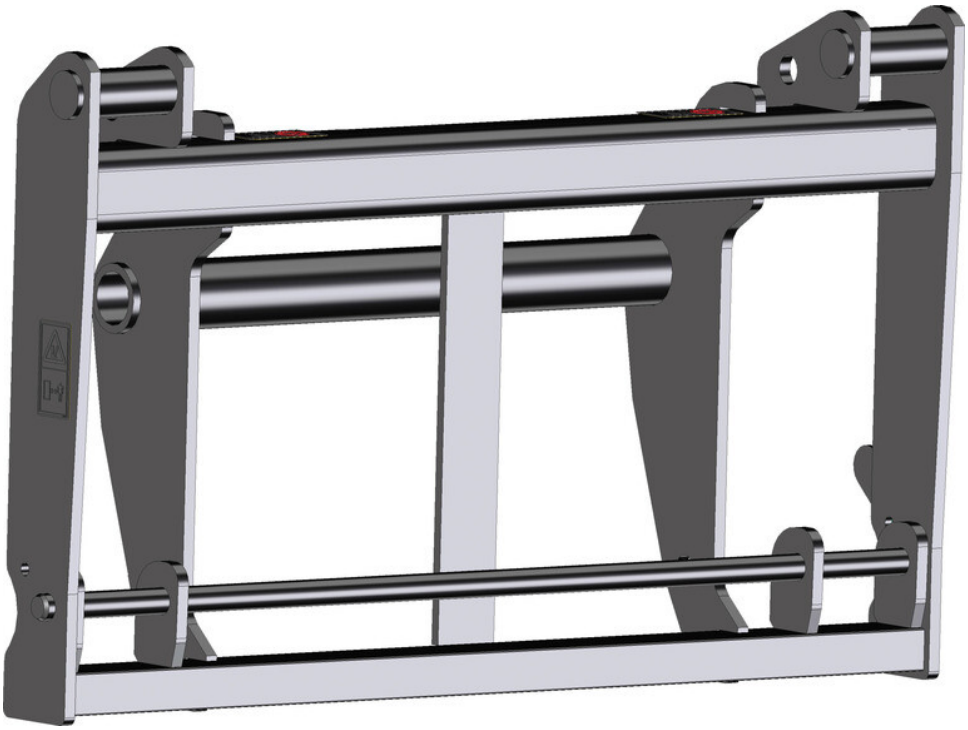

- Steel converter, designed to be positioned on a Manitou apron and be able to receive the attachments with a JCB-type hook.
- The maximum capacity is 4100 kg and the interface weighs 155 kg.
- Warning: This adds a 330 mm outreach, the center of gravity is then modified.
- Allows the use of attachments with competitive brackets on standard MANITOU machines (MANITOU carriage).
- Note: specific safety rules apply, contact your MANITOU dealer.

	IC-JCB
Capacity (kg)	4100
Overall length (mm)	313
Overall height (mm)	787
Width (mm)	1296
Depth (mm)	330
Overall weight (kg)	155
Machine Equipement	X
Carriage type	JCB

Machines compatibility	
Reference number	**52000231**
MLT 630-105 ST4	X
MLT 630-105 V CP ST4	X
MLT 630-105 V ST4	X
MLT 730-115 V CP ST4	X
MLT 737-130 PS+ ST4	X
MLT 840-145 PS+	X
MLT 841-145 PS+	X
MLT-X 735 T LSU	X
MLT-X 737-130 PS+	X
MLT-X 840-140 PS+	X
MLT-X 841 - 145 PS+	X

MANDATORY MACHINE EQUIPMENT: X

FLOATING FORK CARRIAGE WITH HYDRAULIC LEVELING

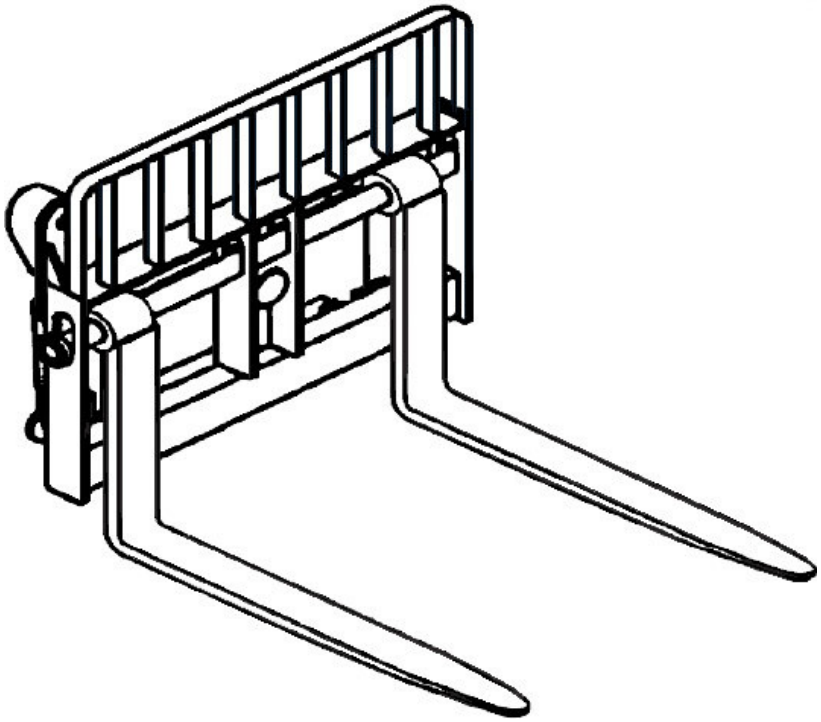

- Pin-type floating forks.
- Max. fork spread 1180 mm (external fork edge).
- Note: road circulation kit mandatory in Italy. Contact your dealer
- Note: road circulation kit mandatory in Germany on MRT Vision/ Vision+. Contact your dealer
- Easy pallet collection & placement with the hydraulic carriage levelling.
- Simplicity & accuracy: levelling with a hydraulic cylinder.

	TFF 1230 + Levelling (a)	TFF 1230 + Levelling (b)
Capacity (kg)	4200	4900
Width (mm)	1230	1230
Overall weight (kg)	765	-

Available fork dimensions		
Load Backrest	Yes	Yes
150 x 60 x 1200		
125 x 50 x 1200		

Machines compatibility		
MRT 1440 Easy T4 S2 400°	X	-
MRT 1640 Easy T4 S2 360°	X	-
MRT 1640 Easy T4 S2 400°	X	-
MRT 1645 75	X	-
MRT 1645 115	X	-
MRT 1840 Easy T4 S2 360°	X	-
MRT 1840 Easy T4 S2 400°	X	-
MRT 1845 75	X	-
MRT 1845 115	X	-
MRT 2145 115	X	-
MRT 2145 Easy T4 S2 360°	X	-
MRT 2145 Easy T4 S2 400°	X	-
MRT 2150 Privilege Plus	X	X
MRT 2260	-	X
MRT 2470 Privilege Plus	X	-
MRT 2545 115	X	-
MRT 2545 Easy T4 S2 360°	X	-
MRT 2545 Easy T4 S2 400°	X	-
MRT 2550 Privilege Plus	X	X
MRT 2570	-	X
MRT 2660	-	X
MRT 3050 Privilege Plus	X	-
MRT 3060	-	X
MRT 3570	-	X
MRT 3570 ES	-	X
MRT-X 1440 Easy 400°	X	-
MRT-X 1640 Easy 360°	X	-
MRT-X 1640 Easy 400°	X	-
MRT-X 1645	X	-
MRT-X 1840 Easy 360°	X	-
MRT-X 1840 Easy 400°	X	-
MRT-X 1845	X	-
MRT-X 2145	X	-
MRT-X 2145 Easy 360°	X	-
MRT-X 2145 Easy 400°	X	-
MRT-X 2150 Privilege Plus	X	X

	TFF 1230 + Levelling (a)	TFF 1230 + Levelling (b)
Machines compatibility		
MRT-X 2260	-	X
MRT-X 2470 Privilege Plus	X	-
MRT-X 2545	X	-
MRT-X 2545 Easy 360°	X	-
MRT-X 2545 Easy 400°	X	-
MRT-X 2550 Privilege Plus	X	X
MRT-X 2570	-	X
MRT-X 2660	-	X
MRT-X 3050 Privilege Plus	X	-
MRT-X 3060	-	X
MRT-X 3570	-	X
MRT-X 3570 ES	-	X

MANDATORY MACHINE EQUIPMENT:

FLOATING FORKS CARRIAGE

- Pin-type forks with side-movement lock.
- Forks mounted on a mobile bar with levelling function.
- Welded load backrest (MT, MLT) / bolted backrest (MRT, MHT).
- Carriage adapted to uneven ground.
- Pin-type forks + side levelling = very easy pallet collection in all conditions
- Must-have on construction yards.

	CAF 1030 / 6 T	CAF 1030 / 7 T	CAF 1030 / 4.5 T	CAF 1800 / 7 T
Capacity (kg)	6000	7000	4500	7000
Width (mm)	1030	1030	1030	1800
Machine Equipement	X	X	X	X
Available fork dimensions				
Load Backrest	Standard	Standard	Standard	Standard
100 x 60 x 1200	52658467		52721040	
125 x 60 x 1200		52676010		52701150
Machines compatibility				
MRT 1645 75	-	-	X	-
MRT 1645 115	-	-	X	-
MRT 1845 75	-	-	X	-
MRT 1845 115	-	-	X	-
MRT 2145 115	-	-	X	-
MRT 2150 Privilege Plus	X	-	-	X
MRT 2470 Privilege Plus	-	X	-	X
MRT 2545 115	-	-	X	-
MRT 2550 Privilege Plus	X	-	-	X
MRT 3050 Privilege Plus	X	-	-	X
MRT 3255 Privilege Plus	-	X	-	X
MRT-X 1645	-	-	X	-
MRT-X 1845	-	-	X	-
MRT-X 2145	-	-	X	-
MRT-X 2150 Privilege Plus	X	-	-	X
MRT-X 2470 Privilege Plus	-	X	-	X
MRT-X 2545	-	-	X	-
MRT-X 2550 Privilege Plus	X	-	-	X
MRT-X 3050 Privilege Plus	X	-	-	X
MRT-X 3255 Privilege Plus	-	X	-	X

MANDATORY MACHINE EQUIPMENT: X

HEAVY DUTY FLOATING FORK POSITIONERS

- High strength design for off-road applications.
- Bar type fork positioning.
- Eye forks.
- Patented sideshift system (9t & 13t).
- Cylinders inserted in holding parts to prevent buckling even under extreme conditions.
- Fork spacing is measured on the outer edge of the forks.
- Indispensable accessory for MHTs.
- Designed for off-road use, suitable even for the worst working conditions.
- Limited thickness for better residual capacity.
- Maximum component protection.
- Improved visibility for higher working speed.
- Option: side shift with cylinder placed on the right for even more visibility (9t & 13t) / constant side shift (18t & 23t).
- Possibility to lock forks on demand (on 9t & 13t, not designed to dump loads).

	TFF + positionner + side shift 13t 2500mm	TFF + positionner 13t 2500mm	TFF + positionner 9t 2000mm	TFF + positionner 9t 2500mm
Capacity (kg)	13000	13000	9000	9000
Overall weight (kg)	1935	1420	980	1090

Machines compatibility				
Reference number	939221	939219	939350	939355
MHT 790	-	-	X	X
MHT 10130	X	X	-	-
MHT-X 790	-	-	X	X
MHT-X 10130	X	X	-	-

MANDATORY MACHINE EQUIPMENT:

HYDRAULIC FLOATING FORK POSITIONER

- Hydraulic circuit with pressure limiter
- Fork spread: 275mm/1010mm
- Standard load backrest
- Pin-type forks- moved through "sliders"
- Note: fork spread measured on the outer fork edges
- Must-have attachment for each & any construction site
- 1 model for the complete MT range-advantage for rental fleets
- Time saver: change fork spread from the cab
- Precise hydraulic fork movements for more accuracy
- Floating forks with leveling capacity for rough terrain applications
- Safety: fork travel lock

	CAF 1260 / 4500 P
Max. outreach (mm)	500
Capacity (kg)	4500
Overall length (mm)	326
Forks width X Forks length X Forks section (mm)	100 X 1200 X 50
Overall height (mm)	1078
Width (mm)	1250
Overall weight (kg)	229
Machine Equipement	
Hydraulic system	Yes
Fork spread minimum (mm)	375
Fork spread maximum (mm)	1010

Available fork dimensions	
Load Backrest	Standard
100 x 50 x 1200	

Machines compatibility	
Reference number	52000273
MT 625 HA	X
MT 733 Easy	X
MT 933 Easy	X
MT 1033 easy	X
MT 1135	X
MT 1135 easy ST5	X
MT 1135 H easy ST5	X
MT 1135 HA Easy ST5	X
MT 1335	X
MT 1335 easy ST5	X
MT 1335 H easy ST5	X
MT 1335 HA easy ST5	X
MT 1440	X
MT 1440 A	X
MT 1440 HA	X
MT 1840	X
MT 1840 A	X
MT 1840 easy ST5	X
MT 1840 HA	X
MT-X 625 H	X
MT-X 733	X
MT-X 1033	X
MT-X 1440	X
MT-X 1440 A	X
MT-X 1840	X
MT-X 1840 A	X

MANDATORY MACHINE EQUIPMENT:

PALLET FORKS CARRIAGE (COMPACT MACHINES)

- Wide carriage with backrest for more stability during travel.
- Standardized FEM forks, side slidable.
- A universal attachment for pallet handling.

	CAT 915 / 800	CAT 920 / 1000	CAT 920 / 1100	CAT 920 / 1200	CAT 1200 / 1200	CAT 1210 / 1200 (a)	CAT 1210 / 1200 (b)	CAT 1220 / 1000 (a)
Forks length X Forks section (mm)	800 X 35.10	1000	1100	1200	1200	1200	1200 X 40	1000
Overall height (mm)	893	893	893	893	888	890	890	890
Width (mm)	915	915	915	915	1212	1212	1212	1212
Depth (mm)	1260	1160	1260	1360	1488	1418	1350	1318
Overall weight (kg)	115	-	-	-	-	-	183	152

Machines compatibility								
All-Tach® Narrow	**-**	**N004018**	**N004019**	**N001938**	**-**	**-**	**-**	**-**
All-Tach®	**N726026**	**-**	**-**	**-**	**N51502507**	**N004020**	**N51502066**	**N736024**
4 point Carriage	**-**	**N701954**	**N701974**	**N701975**	**N51502623**	**N701978**	**-**	**-**
Euro Carriage	**-**	**N002018**	**N002019**	**N51502039**	**N51502582**	**N51502172**	**-**	**-**
850 R	X	-	-	-	-	-	-	-
1050 R	-	-	-	-	-	-	-	X
1350 R NXT2	-	-	-	-	-	-	-	X
1750 RT NXT:3	-	-	-	-	-	-	X	-
2100 RT NXT:3	-	-	-	-	-	-	X	-
MLA 1-25 H	-	X	X	-	-	-	-	-
MLA 3-35 H	-	-	X	X	-	-	-	-
MLA 4-50 H	-	-	-	-	-	X	-	-
MLA 6-65 H-Z	-	-	-	-	X	-	-	-
MLA 7-75 H-Z	-	-	-	-	X	-	-	-

	CAT 1220 / 1000 (b)	CAT 1220 / 1000 (c)	CAT 1220 / 1100 (a)	CAT 1220 / 1100 (b)	CAT 1220 / 1200 (a)	CAT 1220 / 1200 (b)	CAT 1220 / 1200 (c)
Forks length X Forks section (mm)	1000	1000	1100	1100	1200	1200	1200
Overall height (mm)	890	890	890	890	890	890	890
Width (mm)	1212	1212	1212	1212	1212	1212	1212
Depth (mm)	1318	1318	1318	1318	1318	1318	1350
Overall weight (kg)	152	168	160	172	165	172	183

Machines compatibility							
All-Tach® Narrow	-	-	-	-	-	-	-
All-Tach®	N747029	N51502485	N757040	N51502486	N757048	N51502487	N700262
4 point Carriage	-	-	-	-	-	-	-
Euro Carriage	-	-	-	-	-	-	-
1500 R NXT2	X	-	X	-	X	-	-
1650 R	X	-	X	-	X	-	-
1900 R	-	X	-	X	-	X	-
2200 R	-	X	-	X	-	X	-
2600 R	-	X	-	X	-	X	-
2700 V NXT:2	X	-	X	-	X	-	X
3300 V NXT:2	X	-	X	-	X	-	X
4200 V	X	-	X	-	X	-	X

TILTING & SLEWING FORKS CARRIAGE

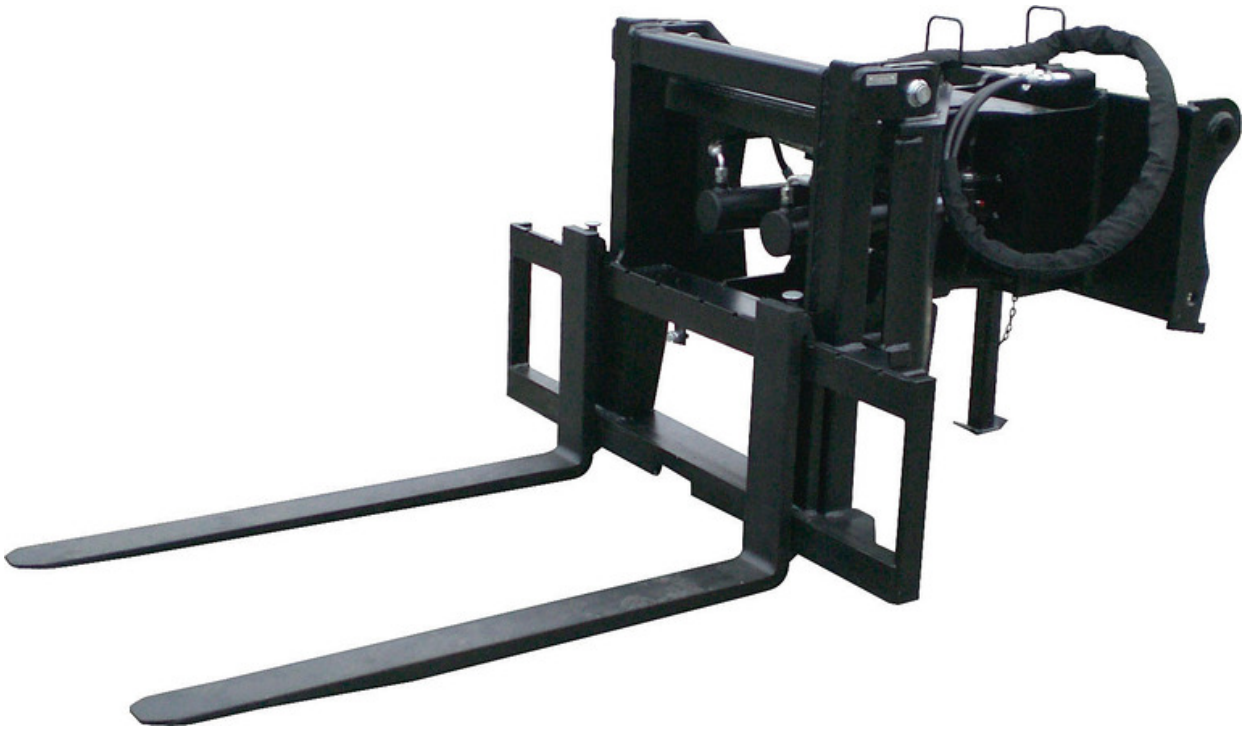

- FEM cat forks. 2.
- 90°/90° hydraulic rotation.
- Use of reliable Manitou components.
- Rotation with 2 cylinders for more precision.
- Straight and turned capacity 1500kg.
- Note: Road circulation kit mandatory in Italy. Contact your dealer
- Easier handling of long loads in constrained spaces.
- Reduced machine movements and manoeuvres - less fuel consumption.
- Recommended for the placement of sandwich panels on roofs (in combination with the cavage of the machine's carriage).

	PFB 90° (a)	PFB 90° (b)
Capacity (kg)	1000	1500
Width (mm)	1360	1360
Overall weight (kg)	631	640

Machines compatibility		
MRT 2150 Privilege Plus	X	X
MRT 2470 Privilege Plus	-	X
MRT 2550 Privilege Plus	X	X
MRT 3050 Privilege Plus	-	X
MRT 3255 Privilege Plus	-	X
MRT-X 2150 Privilege Plus	X	X
MRT-X 2470 Privilege Plus	-	X
MRT-X 2550 Privilege Plus	X	X
MRT-X 3050 Privilege Plus	-	X
MRT-X 3255 Privilege Plus	-	X

MANDATORY MACHINE EQUIPMENT:

NEW

TILTING FORK CARRIAGE (MRT - MHT)

Tilting Fork Carriage (MRT - MHT)

- Tilting forks.
- Forks compliant with FEM standard, forks' length according to model.
- Note: road circulation kit mandatory in Italy. Contact your dealer.
- Note: road circulation kit mandatory in Germany on MRT Vision/ Vision+. Contact your dealer.
- Efficient handling solution.

	CAT 1320 / 6 T (a)	CAT 1320 / 6 T (b)	CAT 1320 / 6 T (c)	CAT 1320 / 7 T (a)	CAT 1320 / 7 T (b)	CAT 1320 / 7 T (c)	CAT 1750 / 7 T (a)	CAT 1750 / 7 T (b)
Capacity (kg)	6000	6000	6000	7000	-	7000	7000	7000
Width (mm)	1320	1320	1320	1320	-	1320	1750	1750
Machine Equipement	X	-	-	-	-	-	-	-

Available fork dimensions								
Load Backrest	No	No	No	No	-	No	No	No
150 x 60 x 1200							52655520	
150 x 60 x 1500								
100 x 60 x 1200	52718348							
150 x 60 x 1800								
100 x 60 x 1500								
100 x 60 x 1800								

Machines compatibility								
Reference number E-RECO	52718348	52718356	52718357	52655420	52718357	52718374	52655520	52718375
MRT 2150 Privilege Plus	X	X	-	-	X	-	X	X
MRT 2470 Privilege Plus	-	-	X	X	X	X	X	X
MRT 2550 Privilege Plus	X	X	-	-	X	-	X	X
MRT 3050 Privilege Plus	X	X	-	-	X	-	X	X
MRT 3255 Privilege Plus	-	-	X	-	X	X	X	X
MRT-X 2150 Privilege Plus	X	-	-	-	X	-	X	X
MRT-X 2470 Privilege Plus	-	-	X	-	X	X	X	X
MRT-X 2550 Privilege Plus	X	-	-	-	X	-	X	X
MRT-X 3050 Privilege Plus	X	-	-	-	X	-	X	X
MRT-X 3255 Privilege Plus	-	-	X	-	X	X	X	X

MANDATORY MACHINE EQUIPMENT:

	CAT 1750 / 7 T (c)	CAT 2000 / 7 T (a)	CAT 2000 / 7 T (b)	CAT 2000 / 7 T (c)	PFB 1320 (c4.5)	PFB 1320 (c5-a)	PFB 1320 (c5-b)
Capacity (kg)	7000	7000	7000	7000	4500	5000	5000
Width (mm)	1750	2000	2000	2000	1320	1320	1320
Machine Equipement	-	-	-	-	-	-	-
Available fork dimensions							
Load Backrest	-	No	No	No	No	No	No
150 x 50 x 1200						921245	53009916
150 x 60 x 1500							
150 x 60 x 1800							
125 x 50 x 1200					924877		
Machines compatibility							
Reference number E-RECO	**52718377**	**52655525**	**52718378**	**52718379**	**-**	**-**	**-**
MRT 1440 Easy T4 S2 400°	-	-	-	-	X	X	-
MRT 1640 Easy T4 S2 360°	-	-	-	-	X	X	-
MRT 1640 Easy T4 S2 400°	-	-	-	-	X	X	-
MRT 1645 75	-	-	-	-	X	-	-
MRT 1645 115	-	-	-	-	X	-	-
MRT 1840 Easy T4 S2 360°	-	-	-	-	X	X	-
MRT 1840 Easy T4 S2 400°	-	-	-	-	X	X	-
MRT 1845 75	-	-	-	-	X	-	-
MRT 1845 115	-	-	-	-	X	-	-
MRT 2145 115	-	-	-	-	X	-	-
MRT 2145 Easy T4 S2 360°	-	-	-	-	X	X	-
MRT 2145 Easy T4 S2 400°	-	-	-	-	X	X	-
MRT 2150 Privilege Plus	X	X	X	X	-	X	-
MRT 2470 Privilege Plus	X	X	X	X	-	X	-
MRT 2545 115	-	-	-	-	X	-	-
MRT 2545 Easy T4 S2 360°	-	-	-	-	X	X	-
MRT 2545 Easy T4 S2 400°	-	-	-	-	X	X	-
MRT 2550 Privilege Plus	X	X	X	X	-	X	-
MRT 3050 Privilege Plus	X	X	X	X	-	X	-
MRT 3255 Privilege Plus	X	X	X	X	-	-	X
MRT-X 1440 Easy 400°	-	-	-	-	X	X	-
MRT-X 1640 Easy 360°	-	-	-	-	X	X	-
MRT-X 1640 Easy 400°	-	-	-	-	X	X	-
MRT-X 1645	-	-	-	-	X	-	-
MRT-X 1840 Easy 360°	-	-	-	-	X	X	-
MRT-X 1840 Easy 400°	-	-	-	-	X	X	-
MRT-X 1845	-	-	-	-	X	-	-
MRT-X 2145	-	-	-	-	X	-	-
MRT-X 2145 Easy 360°	-	-	-	-	X	X	-
MRT-X 2145 Easy 400°	-	-	-	-	X	X	-
MRT-X 2150 Privilege Plus	X	X	X	X	-	X	-
MRT-X 2470 Privilege Plus	X	X	X	X	-	X	-
MRT-X 2545	-	-	-	-	X	-	-

	CAT 1750 / 7 T (c)	CAT 2000 / 7 T (a)	CAT 2000 / 7 T (b)	CAT 2000 / 7 T (c)	PFB 1320 (c4.5)	PFB 1320 (c5-a)	PFB 1320 (c5-b)
Machines compatibility							
MRT-X 2545 Easy 360°	-	-	-	-	X	X	-
MRT-X 2545 Easy 400°	-	-	-	-	X	X	-
MRT-X 2550 Privilege Plus	X	X	X	X	-	X	-
MRT-X 3050 Privilege Plus	X	X	X	X	-	X	-
MRT-X 3255 Privilege Plus	X	X	X	X	-	-	-

MANDATORY MACHINE EQUIPMENT: +

	PFB 1320 (c5-c)	PFB 1320 (c5-d)	PFB 1320 (c7-a)	PFB 1320 (c7-b)	PFB 1750 (c5-a)	PFB 1750 (c5-b)	PFB 1750 (c5-c)
Capacity (kg)	5000	5000	7000	7000	5000	5000	5000
Width (mm)	1320	1320	1320	1320	1750	1750	1750
Machine Equipement	-	-	-	-	-	-	-
Available fork dimensions							
Load Backrest	-	Yes	Yes	Yes	Yes	Yes	No
150 x 50 x 1200	52576641	923864			921246	53010108	52579341
150 x 60 x 1200			52585460	52587815			
Machines compatibility							
Reference number E-RECO	**-**	**-**	**-**	**52718373**	**-**	**-**	**-**
MRT 1440 Easy T4 S2 400°	-	X	-	-	-	-	-
MRT 1640 Easy T4 S2 360°	-	X	-	-	X	-	-
MRT 1640 Easy T4 S2 400°	-	X	-	-	X	-	-
MRT 1840 Easy T4 S2 360°	-	X	-	-	X	-	-
MRT 1840 Easy T4 S2 400°	-	X	-	-	X	-	-
MRT 2145 Easy T4 S2 360°	-	X	-	-	X	-	-
MRT 2145 Easy T4 S2 400°	-	X	-	-	X	-	-
MRT 2150 Privilege Plus	-	X	-	-	X	-	-
MRT 2470 Privilege Plus	X	-	X	X	-	-	X
MRT 2545 Easy T4 S2 360°	-	X	-	-	X	-	-
MRT 2545 Easy T4 S2 400°	-	X	-	-	X	-	-
MRT 2550 Privilege Plus	-	X	-	-	X	-	-
MRT 3050 Privilege Plus	X	-	-	-	-	-	X
MRT 3255 Privilege Plus	-	-	-	-	-	X	-
MRT-X 1440 Easy 400°	-	X	-	-	X	-	-
MRT-X 1640 Easy 360°	-	X	-	-	X	-	-
MRT-X 1640 Easy 400°	-	X	-	-	X	-	-
MRT-X 1840 Easy 360°	-	X	-	-	X	-	-
MRT-X 1840 Easy 400°	-	X	-	-	X	-	-
MRT-X 2145 Easy 360°	-	X	-	-	X	-	-
MRT-X 2145 Easy 400°	-	X	-	-	X	-	-
MRT-X 2150 Privilege Plus	-	X	-	-	X	-	-
MRT-X 2470 Privilege Plus	X	-	X	X	-	-	X
MRT-X 2545 Easy 360°	-	X	-	-	X	-	-
MRT-X 2545 Easy 400°	-	X	-	-	X	-	-
MRT-X 2550 Privilege Plus	-	X	-	-	X	-	-
MRT-X 3050 Privilege Plus	X	-	-	-	-	-	X
MRT-X 3255 Privilege Plus	-	-	-	-	-	X	-

MANDATORY MACHINE EQUIPMENT: +

	PFB 1750 (c7)	PFB 1750 (c9)	PFB 2000 (c5-a)	PFB 2000 (c5-b)	PFB 2000 (c5-c)	PFB 2000 (c7)	PFB 2000 (c9)
Capacity (kg)	7000	9000	5000	5000	5000	7000	9000
Width (mm)	1750	1750	2000	2000	2000	2000	2000
Machine Equipement	-	-	-	-	-	-	-
Available fork dimensions							
Load Backrest	Yes	Yes	Yes	Yes	No	Yes	Yes
150 x 50 x 1200			921247	53010112	52579343		
150 x 60 x 1600	52581520					52581550	
200 x 60 x 1200		939056					939058
Machines compatibility							
Reference number E-RECO	-	-	-	-	-	-	-
MHT 790	-	X	-	-	-	-	X
MHT-X 790	-	X	-	-	-	-	X
MRT 1440 Easy T4 S2 400°	-	-	X	-	-	-	-
MRT 1640 Easy T4 S2 360°	-	-	X	-	-	-	-
MRT 1640 Easy T4 S2 400°	-	-	X	-	-	-	-
MRT 1840 Easy T4 S2 360°	-	-	X	-	-	-	-
MRT 1840 Easy T4 S2 400°	-	-	X	-	-	-	-
MRT 2145 Easy T4 S2 360°	-	-	X	-	-	-	-
MRT 2145 Easy T4 S2 400°	-	-	X	-	-	-	-
MRT 2150 Privilege Plus	-	-	X	-	-	-	-
MRT 2470 Privilege Plus	X	-	-	-	X	X	-
MRT 2545 Easy T4 S2 360°	-	-	X	-	-	-	-
MRT 2545 Easy T4 S2 400°	-	-	X	-	-	-	-
MRT 2550 Privilege Plus	-	-	X	-	-	-	-
MRT 3050 Privilege Plus	-	-	-	-	X	-	-
MRT 3255 Privilege Plus	-	-	-	X	-	-	-
MRT-X 1440 Easy 400°	-	-	X	-	-	-	-
MRT-X 1640 Easy 360°	-	-	X	-	-	-	-
MRT-X 1640 Easy 400°	-	-	X	-	-	-	-
MRT-X 1840 Easy 360°	-	-	X	-	-	-	-
MRT-X 1840 Easy 400°	-	-	X	-	-	-	-
MRT-X 2145 Easy 360°	-	-	X	-	-	-	-
MRT-X 2145 Easy 400°	-	-	X	-	-	-	-
MRT-X 2150 Privilege Plus	-	-	X	-	-	-	-
MRT-X 2470 Privilege Plus	X	-	-	-	X	X	-
MRT-X 2545 Easy 360°	-	-	X	-	-	-	-
MRT-X 2545 Easy 400°	-	-	X	-	-	-	-
MRT-X 2550 Privilege Plus	-	-	X	-	-	-	-
MRT-X 3050 Privilege Plus	-	-	-	-	X	-	-
MRT-X 3255 Privilege Plus	-	-	-	X	-	-	-

MANDATORY MACHINE EQUIPMENT: +

NEW

TILTING FORK CARRIAGE WITH SIDE SHIFT (MRT - MHT)

Tilting Fork Carriage With Side Shift (MRT - MHT)

- Tilting forks.
- Forks compliant with FEM standard, forks' length according to model.
- Constant side shift.
- Note: road circulation kit mandatory in Italy. Contact your dealer.
- Note: road circulation kit mandatory in Germany on MRT Vision/ Vision+. Contact your dealer.
- Efficient handling solution.

	CAT 2000 / 7 T (a)	CAT 2000 / 7 T (b)	CAT 2000 / 7 T (c)	PFB 1320 (c4.5)	PFB 1320 (c4.9-a)	PFB 1320 (c4.9-b)	PFB 1320 (c4.9-c)
Capacity (kg)	7000	7000	7000	4500	4900	4900	4900
Width (mm)	2000	2000	2000	1320	1320	1320	1320
Machine Equipement	-	-	-	-	-		-
Available fork dimensions							
Load Backrest	No	No	No	No	No	-	No
150 x 50 x 2000						921514	
150 x 60 x 2000			52719379				
150 x 50 x 1200					921241		53010106
150 x 60 x 1200	52712870						
120 x 50 x 1200				924878			
150 x 60 x 1500		52719378					
Machines compatibility							
MRT 1440 Easy T4 S2 400°	-	-	-	X	-	-	-
MRT 1640 Easy T4 S2 360°	-	-	-	X	-	-	-
MRT 1640 Easy T4 S2 400°	-	-	-	X	-	-	-
MRT 1645 75	-	-	-	X	-	-	-
MRT 1645 115	-	-	-	X	-	-	-
MRT 1840 Easy T4 S2 360°	-	-	-	X	-	-	-
MRT 1840 Easy T4 S2 400°	-	-	-	X	-	-	-
MRT 1845 75	-	-	-	X	-	-	-
MRT 1845 115	-	-	-	X	-	-	-
MRT 2145 115	-	-	-	X	-	-	-
MRT 2145 Easy T4 S2 360°	-	-	-	X	-	-	-
MRT 2145 Easy T4 S2 400°	-	-	-	X	-	-	-
MRT 2150 Privilege Plus	X	X	X	-	X	-	-
MRT 2260	-	-	-	-	X	X	-
MRT 2470 Privilege Plus	X	X	X	-	X	-	-
MRT 2545 115	-	-	-	X	-	-	-
MRT 2545 Easy T4 S2 360°	-	-	-	X	-	-	-
MRT 2545 Easy T4 S2 400°	-	-	-	X	-	-	-
MRT 2550 Privilege Plus	X	X	X	-	X	-	-
MRT 2570	-	-	-	-	X	X	-
MRT 2660	-	-	-	-	X	X	-
MRT 3050 Privilege Plus	X	X	X	-	X	-	-
MRT 3060	-	-	-	-	X	X	-
MRT 3255 Privilege Plus	X	X	X	-	-	-	X
MRT 3570	-	-	-	-	X	X	-
MRT 3570 ES	-	-	-	-	X	X	-
MRT-X 1440 Easy 400°	-	-	-	X	-	-	-
MRT-X 1640 Easy 360°	-	-	-	X	-	-	-
MRT-X 1640 Easy 400°	-	-	-	X	-	-	-
MRT-X 1645	-	-	-	X	-	-	-
MRT-X 1840 Easy 360°	-	-	-	X	-	-	-
MRT-X 1840 Easy 400°	-	-	-	X	-	-	-

	CAT 2000 / 7 T (a)	CAT 2000 / 7 T (b)	CAT 2000 / 7 T (c)	PFB 1320 (c4.5)	PFB 1320 (c4.9-a)	PFB 1320 (c4.9-b)	PFB 1320 (c4.9-c)
Machines compatibility							
MRT-X 1845	-	-	-	X	-	-	-
MRT-X 2145	-	-	-	X	-	-	-
MRT-X 2145 Easy 360°	-	-	-	X	-	-	-
MRT-X 2145 Easy 400°	-	-	-	X	-	-	-
MRT-X 2150 Privilege Plus	X	X	X	-	X	-	-
MRT-X 2260	-	-	-	-	X	X	-
MRT-X 2470 Privilege Plus	X	X	X	-	X	-	-
MRT-X 2545	-	-	-	X	-	-	-
MRT-X 2545 Easy 360°	-	-	-	X	-	-	-
MRT-X 2545 Easy 400°	-	-	-	X	-	-	-
MRT-X 2550 Privilege Plus	X	X	X	-	X	-	-
MRT-X 2570	-	-	-	-	X	X	-
MRT-X 2660	-	-	-	-	X	X	-
MRT-X 3050 Privilege Plus	X	X	X	-	X	-	-
MRT-X 3060	-	-	-	-	X	X	-
MRT-X 3255 Privilege Plus	X	X	X	-	-	-	X
MRT-X 3570	-	-	-	-	X	X	-
MRT-X 3570 ES	-	-	-	-	X	X	-

MANDATORY MACHINE EQUIPMENT:

	PFB 1320 (c4.9-d)	PFB 1750 (c4.9-a)	PFB 1750 (c4.9-b)	PFB 1750 (c9)	PFB 2000 (c4.9-a)	PFB 2000 (c4.9-b)	PFB 2000 (c9)
Capacity (kg)	4900	4900	4900	9000	4900	4900	9000
Width (mm)	1320	1750	1750	1750	2000	2000	2000
Machine Equipement	-	-			-	-	
Available fork dimensions							
Load Backrest	Yes	Yes	Yes	-	Yes	Yes	-
150 x 50 x 1200	923858		53010110			53010114	
120 x 50 x 1200		921242			921243		
200 x 60 x 1200				939057			939059
Machines compatibility							
MHT 790	-	-	-	X	-	-	X
MHT-X 790	-	-	-	X	-	-	X
MRT 2150 Privilege Plus	X	X	-	-	X	-	-
MRT 2470 Privilege Plus	X	X	-	-	X	-	-
MRT 2550 Privilege Plus	X	X	-	-	X	-	-
MRT 3050 Privilege Plus	X	X	-	-	X	-	-
MRT 3255 Privilege Plus	-	-	X	-	-	X	-
MRT-X 2150 Privilege Plus	X	X	-	-	X	-	-
MRT-X 2470 Privilege Plus	X	X	-	-	X	-	-
MRT-X 2550 Privilege Plus	X	X	-	-	X	-	-
MRT-X 3050 Privilege Plus	X	X	-	-	X	-	-
MRT-X 3255 Privilege Plus	-	-	X	-	-	X	-

MANDATORY MACHINE EQUIPMENT:

TILTING FORKS CARRIAGE

- Tilting forks.
- Forks compliant with FEM/ISO standard, forks' length according to model.
- Forks are not included in the PFB, order 2 forks.
- Efficient handling solution.
- Adapted to rough terrain.

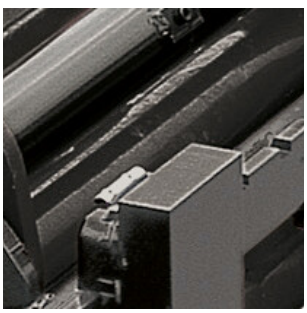

	PFB 20N 1020	PFB 25N 1020	PFB 25N 1260	PFB 35N 1260	PFB 35N 1470	PFB 35N 1580
Capacity (kg)	2000	2500	2500	3500	3500	3500
Width (mm)	1052	1026	1302	1302	1512	1622
Overall weight (kg)	66	71	80	93	117	122
Machine Equipement	×	×	×	×	×	×

Available fork dimensions						
125 x 45 x 1200		415835	415835	415618	415618	415618
100 x 40 x 1200	415691					

Machines compatibility						
Reference number	**52558727**	**571958**	**571959**	**653744**	**653745**	**653746**
Skid Steer Carriage reference	**52000825**	**-**	**-**	**-**	**-**	**-**
MLT 625-75 H	-	X	X	-	-	-
MLT 630-105 ST4	-	-	-	X	X	X
MLT 630-105 V CP ST4	-	-	-	X	X	X
MLT 630-105 V ST4	-	-	-	X	X	X
MLT 630-115	-	-	-	-	X	X
MLT 630-115 V	-	-	-	X	X	X
MLT 630-115 V CP	-	-	-	X	X	X
MLT 635-130 PS+	-	-	-	X	X	X
MLT 635-140 V+	-	-	-	X	X	X
MLT 730-115 V	-	-	-	X	X	X
MLT 730-115 V CP	-	-	-	X	X	X
MLT 730-115 V CP ST4	-	-	-	X	X	X
MLT 733-115	-	-	-	X	X	X
MLT 733-115 LSU	-	-	-	X	X	X
MLT 733-115 ST4	-	-	-	X	X	X
MLT-X 625-75 H	-	X	X	-	-	-
MLT-X 732	-	-	-	X	-	-
MLT-X 735 T LSU	-	-	-	X	X	X
MLT-X 1035 LT LSU	-	-	-	X	X	X
MT 420 H	X	-	-	-	-	-
MT 625 HA	-	X	X	-	-	-
MT 733 Easy	-	-	-	X	X	X
MT 933 Easy	-	-	-	X	X	X
MT 1033 easy	-	-	-	X	X	X
MT 1135	-	-	-	X	X	-
MT 1335	-	-	-	X	X	-
MT-X 420 H	X	-	-	-	-	-

MANDATORY MACHINE EQUIPMENT: ×

	PFB 45N 1260	PFB 45N 1670	PFB 45N 2000	PFB 75MT 1750	PFB 75MT 2000	PFB FEM4 1200
Capacity (kg)	4500	4500	4500	7500	7500	6000
Width (mm)	1286	1696	2026	1834	2084	1200
Overall weight (kg)	198	252	295	-	-	-
Machine Equipement	×	×	×	×	×	×
Available fork dimensions						
100 x 50 x 1200	315449					
200 x 60 x 1200				513110	513110	513110
125 x 50 x 1200		415652	415652			

Machines compatibility						
Reference number	**654407**	**653747**	**653748**	**504107**	**527216**	**732330**
Skid Steer Carriage reference	**-**	**-**	**-**	**-**	**-**	**-**
MLT 737-130 PS+	-	X	X	-	-	-
MLT 737-130 PS+ ST4	X	X	X	-	-	-
MLT 741-130 PS+	X	X	X	-	-	-
MLT 741-140 V+	X	X	X	-	-	-
MLT 840-145 PS+	X	X	-	-	-	-
MLT 841-145 PS+	-	X	-	-	-	-
MLT 845-100 H	X	X	X	-	-	-
MLT 845-120	X	X	X	-	-	-
MLT 940-140 V+	-	X	X	-	-	-
MLT 961-145 V+ L	-	-	-	X	X	X
MLT 961-160 V+ L	-	-	-	X	X	X
MLT 1040-145 PS+ L	X	X	-	-	-	-
MLT 1041-145 PS+L	-	X	-	-	-	-
MLT-X 737-130 PS+	X	X	X	-	-	-
MLT-X 741-140 V+	X	X	X	-	-	-
MLT-X 840-140 PS+	X	X	-	-	-	-
MLT-X 841 - 145 PS+	-	X	-	-	-	-
MLT-X 845-120	-	-	X	-	-	-
MLT-X 845-120 H	-	-	X	-	-	-
MLT-X 961-145 V+ L	-	-	-	X	X	X
MLT-X 961-160 V+ L	-	-	-	X	X	X
MLT-X 1040-140 PS+ L	X	X	-	-	-	-
MLT-X 1041-145 PS+L	-	X	-	-	-	-
MT 1440	X	X	X	-	-	-
MT 1440 A ST5	X	-	X	-	-	-
MT 1440 easy ST5	X	-	X	-	-	-
MT 1440 HA ST5	X	-	X	-	-	-
MT 1440 ST5	X	-	X	-	-	-
MT 1840	X	X	X	-	-	-
MT 1840 A ST5	X	-	X	-	-	-
MT 1840 easy ST5	X	-	X	-	-	-
MT 1840 HA ST5	X	-	X	-	-	-
MT 1840 ST5	X	-	X	-	-	-

	PFB 45N 1260	PFB 45N 1670	PFB 45N 2000	PFB 75MT 1750	PFB 75MT 2000	PFB FEM4 1200
Machines compatibility						
MT-X 1440	X	X	X	-	-	-
MT-X 1440 A	X	X	X	-	-	-
MT-X 1840	X	X	X	-	-	-
MT-X 1840 A	X	X	X	-	-	-

MANDATORY MACHINE EQUIPMENT: ╳

FORKS & GRABS

Range

164 Bale Forks (Compact machines)
166 High Capacity Silage & Manure Grab
168 Manure Fork (Compact machines)
172 Manure Fork With Grapple
174 Manure Fork With Grapple (Compact machines)
178 Shear Grab
180 Square Bale Forks

BALE FORKS (COMPACT MACHINES)

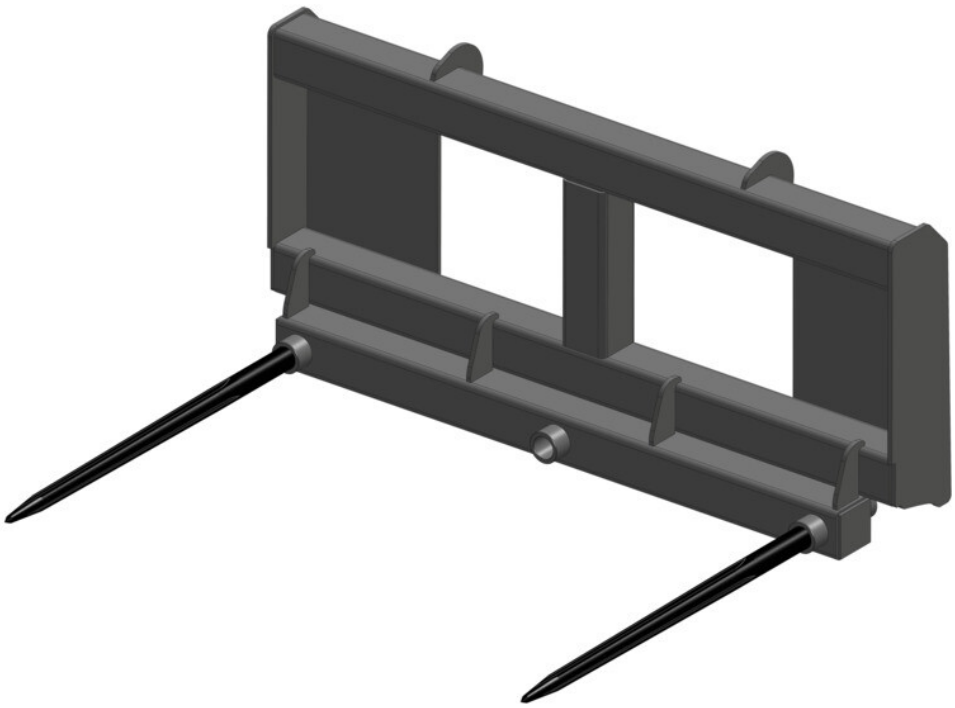

- 2 heavy duty forged tines.
- LB: load backrest version.
- Easy and economical attachment for the handling of all bales.
- The best economical choice: good value for money & functionality.

	FB 950 / 700	FB 950 / 700 LB	FB 1110
Overall height (mm)	610	1392	560
Width (mm)	1150	1150	1170
Depth (mm)	820	1170	1110
Overall weight (kg)	73	100	75
Teeth	2	2	2

Machines compatibility			
All-Tach®	**N51502684**	**N51502687**	**N747028**
4 point Carriage	**N51502685**	**N51502688**	**-**
Euro Carriage	**N51502686**	**N51502689**	**-**
1500 R NXT2	-	-	X
1650 R	-	-	X
1900 R	-	-	X
2200 R	-	-	X
2600 R	-	-	X
2700 V NXT:2	-	-	X
MLA 1-25 H	X	-	-
MLA 3-35 H	X	X	-
MLA 4-50 H	X	X	-
MLA 6-65 H-Z	X	X	-
MLA 7-75 H-Z	X	X	-

HIGH CAPACITY SILAGE & MANURE GRAB

- Large capacity 2000 L.
- Grapple rotation stops ensure long life for hydraulic cylinders.
- Bolt-on teeth and tines for easy maintenance.
- High quality wear resistant and high yield steels used extensively.
- Teeth: Ø 45 mm, 939 mm.
- Tines: Ø 45 mm, 1100 mm.
- For silage and light straw manure. Max 700kg/m3.
- Massive and efficient attachment.
- Excellent visibility thanks to innovative design.
- The best solution for manure handling.
- Improved design allows working flush with walls.
- Versatile attachment that enables occasional square bale handling.

	FMG 2100 / 1800 ONLY UK IRL	FMG 2450 / 2000
Heaped Capacity (l)	1800	2000
Overall length (mm)	1352	1381
Forks length (mm)	990	990
Overall height (mm)	1223	1201
Width (mm)	2100	2435
Overall weight (kg)	470	686
Machine Equipement		
Teeth / Fingers	4 / 10	5 / 12
Fork spread minimum (mm)	221	210
Fork spread maximum (mm)	637	554

Machines compatibility		
Reference number	52000082	790534
MLT 630-105 ST4	X	-
MLT 630-105 V CP ST4	X	-
MLT 630-105 V ST4	X	-
MLT 630-115	X	-
MLT 630-115 V	X	-
MLT 630-115 V CP	X	-
MLT 733-115 ST4	-	X
MLT 737-130 PS+ ST4	-	X
MLT 840-145 PS+	-	X
MLT 841-145 PS+	-	X
MLT 961-145 V+ L	-	X
MLT 961-160 V+ L	-	X
MLT 1040-145 PS+ L	-	X
MLT 1041-145 PS+L	-	X
MLT-X 732	-	X
MLT-X 735 T LSU	-	X
MLT-X 737-130 PS+	-	X
MLT-X 840-140 PS+	-	X
MLT-X 841 - 145 PS+	-	X
MLT-X 961-145 V+ L	-	X
MLT-X 961-160 V+ L	-	X
MLT-X 1040-140 PS+ L	-	X
MLT-X 1041-145 PS+L	-	X

MANDATORY MACHINE EQUIPMENT:

MANURE FORK (COMPACT MACHINES)

- Strong & simple construction.
- Heavy duty tines.
- Must-have attachment for manure and bale handling.

	FM 915	FM 920	FM 1080	FM 1200 (a)	FM 1200 (b)	FM 1400
Overall height (mm)	580	694	580	694	694	595
Width (mm)	915	920	1080	1200	1200	1400
Depth (mm)	825	843	825	843	843	893
Overall weight (kg)	73	73	160	109	109	160

Machines compatibility						
All-Tach® Narrow	**-**	**N004072**	**-**	**N004073**	**-**	**-**
All-Tach®	**N726020**	**-**	**N726021**	**-**	**-**	**N736026**
4 point Carriage	**-**	**N701955**	**-**	**N701966**	**-**	**-**
Euro Carriage	**-**	**-**	**-**	**N51502141**	**N51502173**	**-**
850 R	X	-	X	-	-	-
1050 RT	-	-	-	-	-	X
1350 R NXT2	-	-	-	-	-	X
1350 RT	-	-	-	-	-	X
MLA 1-25 H	-	X	-	-	-	-
MLA 3-35 H	-	-	-	X	-	-
MLA 4-50 H	-	-	-	-	X	-
MLA 6-65 H-Z	-	-	-	-	X	-

	FM 1500	FM 1520	FM 1650	FM 1680	FM 1760	FM 1850 (a)
Overall height (mm)	765	575	704	600	600	600
Width (mm)	1500	1520	1650	1680	1760	1850
Depth (mm)	863	893	1032	870	870	870
Overall weight (kg)	165	170	183	134	810	153

Machines compatibility						
All-Tach® Narrow	-	-	-	-	-	-
All-Tach®	N004075	N736027	N51502515	N747023	N757030	N757031
4 point Carriage	N701984	-	N51502624	-	-	-
Euro Carriage	N51502174	-	N51502583	-	-	-
1350 R NXT2	-	X	-	-	-	-
1350 RT	-	X	-	-	-	-
1500 R NXT2	-	-	-	X	-	-
1650 R	-	-	-	X	-	-
1900 R	-	-	-	X	-	-
2200 R	-	-	-	-	X	-
2600 R	-	-	-	-	-	X
2700 V NXT:2	-	-	-	-	-	X
3300 V NXT:2	-	-	-	-	-	X
MLA 4-50 H	X	-	-	-	-	-
MLA 6-65 H-Z	-	-	X	-	-	-
MLA 7-75 H-Z	-	-	X	-	-	-

	FM 1850 (b)	FM 1880	FM 1950	FM 2140	FM 2150
Overall height (mm)	600	600	704	600	704
Width (mm)	1850	1880	1950	2140	2150
Depth (mm)	870	870	1032	870	1032
Overall weight (kg)	153	153	216	170	233

Machines compatibility					
All-Tach® Narrow	**-**	**-**	**-**	**-**	**-**
All-Tach®	**N51502480**	**N51502080**	**N51502514**	**N700260**	**N51502513**
4 point Carriage	**-**	**-**	**N51502625**	**-**	**N51502626**
Euro Carriage	**-**	**-**	**N51502584**	**-**	**N51502585**
2200 R	X	-	-	-	-
2600 R	-	X	-	-	-
2700 V NXT:2	-	X	-	-	-
3300 V NXT:2	-	X	-	X	-
4200 V	-	-	-	X	-
MLA 6-65 H-Z	-	-	X	-	-
MLA 7-75 H-Z	-	-	X	-	X

MANURE FORK WITH GRAPPLE

- Massive structure and reinforced grapple for more longevity.
- Open structure.
- Very good manure holding by the grab.
- Adjustable grapple opening- more working accuracy.
- Forged tines & teeth- easy to dismantle.
- Well protected hydraulic components.
- Rugged, multi-purpose attachment.
- Easy handling of compact manure.
- Total jaw opening allows working flush with walls.
- Versatile attachment that enables occasional square bale handling.
- Very good visibility, faster work.

	FFGR 1700	FFGR 1950	FFGR 1950 DA	FFGR 2100	FFGR 2400
Capacity (kg)	-	1580	-	1700	1700
Heaped Capacity (l)	1050	1200	1200	1300	1520
Forks length (mm)	803	810	803	810	810
Fork spread (mm)	225	225	225	217	205
Opened grab height (mm)	2093	2073	2093	2073	2073
Closed grab height (mm)	1124	1127	1124	1127	1127
Width (mm)	170	1950	1950	2100	2400
Length (mm)	1320	1330	1320	1330	1330
Overall weight (kg)	505	477	530	492	528
Machine Equipement					
Teeth / Fingers	8 / 7	9 / 7	9 / 7	10 / 7	12 / 8

Machines compatibility					
Reference number	751429	751404	751428	751403	751405
MLT 625-75 H	X	-	X	-	-
MLT 630-105 ST4	-	X	-	X	-
MLT 630-105 V CP ST4	-	X	-	X	-
MLT 630-105 V ST4	-	X	-	X	-
MLT 630-115	-	X	-	X	-
MLT 630-115 V	-	X	-	X	-
MLT 630-115 V CP	-	X	-	X	-
MLT 730-115 V	-	X	-	X	-
MLT 730-115 V CP	-	X	-	X	-
MLT 730-115 V CP ST4	-	X	-	X	-
MLT 733-115 ST4	-	-	-	X	X
MLT 737-130 PS+ ST4	-	-	-	X	X
MLT 840-145 PS+	-	-	-	-	X
MLT 841-145 PS+	-	-	-	-	X
MLT 1040-145 PS+ L	-	-	-	-	X
MLT 1041-145 PS+L	-	-	-	-	X
MLT-X 625-75 H	X	-	X	-	-
MLT-X 732	-	-	-	X	X
MLT-X 735 T LSU	-	-	-	X	X
MLT-X 737-130 PS+	-	-	-	X	X
MLT-X 840-140 PS+	-	-	-	-	X
MLT-X 841 - 145 PS+	-	-	-	-	X
MLT-X 1040-140 PS+ L	-	-	-	-	X
MLT-X 1041-145 PS+L	-	-	-	-	X

MANDATORY MACHINE EQUIPMENT:

MANURE FORK WITH GRAPPLE (COMPACT MACHINES)

- Complete grapple opening for an efficient work.
- Heavy duty teeth & tines.
- Attachment designed for agricultural applications.

	FMG 920 / 240 (a)	FMG 920 / 240 (b)	FMG 1080 / 290	FMG 1100 / 320	FMG 1200 / 320 (a)	FMG 1200 / 320 (b)	FMG 1200 / 430	FMG 1400 / 380
Capacity (kg)	-	-	-	-	-	-	-	-
Heaped Capacity (l)	240	240	290	290	320	320	430	380
Forks length (mm)	-	-	-	-	-	-	-	-
Overall height (mm)	746	746	746	746	746	746	796	746
Width (mm)	920	920	1080	1100	1200	1200	1200	1400
Depth (mm)	-	905	905	848	904	905	1028	848
Overall weight (kg)	120	120	130	145	144	136	180	150
Teeth / Fingers	-	-	-	6	-	-	6	-

Machines compatibility								
All-Tach® Narrow	**N004029**	**-**	**-**	**-**	**N004030**	**-**	**-**	**-**
All-Tach®	**-**	**N726022**	**N726023**	**-**	**-**	**N736028**	**N004099**	**N736029**
4 point Carriage	**N701956**	**-**	**-**	**-**	**N701967**	**-**	**-**	**-**
Euro Carriage	**-**	**-**	**-**	**N51502144**	**N51502145**	**-**	**-**	**-**
850 R	-	X	X	-	-	-	-	-
1050 R	-	-	-	-	-	X	-	X
1350 R NXT2	-	-	-	-	-	-	-	X
1350 RT	-	-	-	-	X	X	-	X
MLA 1-25 H	X	-	-	-	-	-	-	-
MLA 3-35 H	-	-	-	X	X	-	-	-
MLA 4-50 H	-	-	-	-	-	-	X	-

	FMG 1500 / 380	FMG 1500 / 540	FMG 1650	FMG 1680 / 600 (a)	FMG 1680 / 600 (b)	FMG 1760 / 620 (a)	FMG 1760 / 620 (b)	FMG 1850 / 660 (a)
Capacity (kg)	-	-	-	-	-	-	-	-
Heaped Capacity (l)	380	540	660	600	600	620	620	660
Forks length (mm)	-	-	810	-	-	-	-	-
Overall height (mm)	746	796	851	796	796000	796	796	796
Width (mm)	1500	1500	1650	1680	1680	1760	1760	1850
Depth (mm)	848	1028	1032	1028	1028	1028	1028	1028
Overall weight (kg)	165	213	300	240	240	250	250	280
Teeth / Fingers	-	8	8	-	9 / 4	-	9 / 4	-

Machines compatibility								
All-Tach® Narrow	-	-	-	-	-	-	-	-
All-Tach®	N736030	-	N51502512	N747025	N51502056	N51502481	N51502057	N757033
4 point Carriage	-	-	N51502627	-	-	-	-	-
Euro Carriage	-	-	N51502586	-	-	-	-	-
1050 R	X	-	-	-	-	-	-	-
1350 R NXT2	X	-	-	-	-	-	-	-
1350 RT	X	-	-	-	-	-	-	-
1500 R NXT2	X	-	-	X	-	-	-	-
1650 R	-	-	-	X	-	-	-	-
1750 RT NXT:3	-	-	-	-	X	-	X	-
1900 R	-	-	-	X	-	-	-	-
2200 R	-	-	-	-	-	X	-	-
2600 R	-	-	-	-	-	-	-	X
2700 V NXT:2	-	-	-	-	-	-	-	X
4200 V	-	-	-	-	-	-	-	X
MLA 4-50 H	-	X	-	-	-	-	-	-
MLA 6-65 H-Z	-	-	X	-	-	-	-	-
MLA 7-75 H-Z	-	-	X	-	-	-	-	-

	FMG 1850 / 660 (b)	FMG 1850 / 660 (c)	FMG 1880 / 660	FMG 1950	FMG 2140 / 760 (a)	FMG 2140 / 760 (b)	FMG 2150
Capacity (kg)	-	-	-	780	-	-	860
Heaped Capacity (l)	660	660	660	-	-	760	-
Forks length (mm)	-	-	-	-	-	-	-
Overall height (mm)	796	796	796	851	796	796	851
Width (mm)	1850	1850	1880	1950	2140	2140	2150
Depth (mm)	1028	1028	1028	1032	1028	1028	1032
Overall weight (kg)	280	280	280	345	310	310	365
Teeth / Fingers	-	10 / 4	-	10	-	11 / 4	11

Machines compatibility							
All-Tach® Narrow	-	-	-	-	-	-	-
All-Tach®	N51502482	796	N51502081	N51502511	N700261	N51502059	N51502510
4 point Carriage	-	-	-	N51502628	-	-	N51502629
Euro Carriage	-	-	-	N51502587	-	-	N51502588
1750 RT NXT:3	-	X	-	-	-	-	-
2100 RT NXT:3	-	X	-	-	-	X	-
2200 R	X	-	-	-	-	-	-
2600 R	-	-	X	-	-	-	-
2700 V NXT:2	-	-	X	-	-	-	-
3300 V NXT:2	-	-	X	-	X	-	-
4200 V	-	-	-	-	X	-	-
MLA 6-65 H-Z	-	-	-	X	-	-	-
MLA 7-75 H-Z	-	-	-	X	-	-	X

SHEAR GRAB

- Boxed structure, rigidity & longevity.
- Body made of high resistance steels.
- Heavy duty teeth for easy penetration.
- Lateral shears for a good pit penetration & clean cutting.
- Increased cylinder diameter for more power.
- Bolt-on cutting teeth for easy maintenance (except SHG 1700/850: welded).
- Suitable for any type of silage.
- Efficient and accurate cutting of the silage pit.
- Very clean silage pit face avoiding secondary fermentation.
- Powerful attachment for a fast cutting.
- Closed structure to limit material losses (except SHG 1700/850).

	SHG 1600 / 1200	SHG 1700 / 850	SHG 1800 / 1350	SHG 2200 / 1650	SHG 2400 / 1800
Heaped Capacity (l)	1200	850	1350	1650	1800
Overall length (mm)	1295	1267	1295	1295	1295
Opened grab height (mm)	1475	-	1475	1475	1475
Closed grab height (mm)	1010	963	1010	1010	1010
Width (mm)	1654	1865	1854	2254	2454
Depth (mm)	850	-	850	850	850
Overall weight (kg)	705	710	749	835	936
Machine Equipement					
Teeth	14	14	14	14	14

Machines compatibility					
Reference number	**52000380**	**757723**	**52000381**	**52000382**	**52000383**
MLA-T 533-145 V+ - ST5	-	-	-	X	-
MLT 625-75 H	X	-	-	-	-
MLT 630-105 ST4	-	-	X	-	-
MLT 630-105 V CP ST4	-	-	X	-	-
MLT 630-105 V ST4	-	-	X	-	-
MLT 630-115	-	-	X	-	-
MLT 630-115 V	-	-	X	-	-
MLT 630-115 V CP	-	-	X	-	-
MLT 730-115 V	-	-	X	-	-
MLT 730-115 V CP	-	-	X	-	-
MLT 730-115 V CP ST4	-	-	X	-	-
MLT 733-115	-	-	-	-	X
MLT 733-115 LSU	-	-	-	-	X
MLT 733-115 ST4	-	-	-	-	X
MLT 737-130 PS+	-	-	-	-	X
MLT 737-130 PS+ ST4	-	-	-	-	X
MLT 741-130 PS+	-	-	-	-	X
MLT 741-140 V+	-	-	-	-	X
MLT 840-145 PS+	-	-	-	-	X
MLT 841-145 PS+	-	-	-	-	X
MLT 940-140 V+	-	-	-	-	X
MLT 961-145 V+ L	-	-	-	-	X
MLT 1040-145 PS+ L	-	-	-	-	X
MLT 1041-145 PS+L	-	-	-	-	X
MLT-X 625-75 H	X	-	-	-	-
MLT-X 732	-	-	-	X	-
MLT-X 735 T LSU	-	X	-	X	-
MLT-X 737-130 PS+	-	-	-	-	X
MLT-X 840-140 PS+	-	-	-	-	X
MLT-X 841 - 145 PS+	-	-	-	-	X
MLT-X 961-145 V+ L	-	-	-	-	X
MLT-X 1040-140 PS+ L	-	-	-	-	X
MLT-X 1041-145 PS+L	-	-	-	-	X

MANDATORY MACHINE EQUIPMENT:

SQUARE BALE FORKS

- 700 to 1700 kg capacity.
- Holding tines (without tools) for road traffic.
- Holding upper frame, easy under roof operations.
- Upholding teeth on the top of the frame.
- 2 tines, Ø 35 mm, 950 mm working length.
- 4 tines, Ø 45 mm, 1010 mm working length.
- Efficient and economical square bale handling solution.
- Simultaneous handling of 1 or 4 square bales (height : 800 mm).
- Good bale upholding.
- FB 950/700 : load backrest included for a better stability of the load.
- Attachment adapted to road traffic.

	FB 1900 / 1700
Capacity (kg)	1700
Forks length (mm)	1010
Fork spread (mm)	600
Overall height (mm)	2236
Width (mm)	1878
Length (mm)	1341
Overall weight (kg)	215
Machine Equipement	X
Teeth	4

Machines compatibility	
Reference number	**790699**
MLT 625-75 H	X
MLT 630-105 ST4	X
MLT 630-105 V CP ST4	X
MLT 630-105 V ST4	X
MLT 630-115	X
MLT 630-115 V	X
MLT 630-115 V CP	X
MLT 730-115 V	X
MLT 730-115 V CP	X
MLT 730-115 V CP ST4	X
MLT 733-115	X
MLT 733-115 LSU	X
MLT 733-115 ST4	X
MLT 737-130 PS+ ST4	X
MLT 840-145 PS+	X
MLT 841-145 PS+	X
MLT 961-145 V+ L	X
MLT 961-160 V+ L	X
MLT 1040-145 PS+ L	X
MLT 1041-145 PS+L	X
MLT-X 625-75 H	X
MLT-X 732	X
MLT-X 735 T LSU	X
MLT-X 737-130 PS+	X
MLT-X 840-140 PS+	X
MLT-X 841 - 145 PS+	X
MLT-X 961-145 V+ L	X
MLT-X 961-160 V+ L	X
MLT-X 1040-140 PS+ L	X
MLT-X 1041-145 PS+L	X
MT-X 625 H	X

MANDATORY MACHINE EQUIPMENT: X

JIBS

Range

183 2-Hook Jib
186 3-Hook Jib
188 Big Bag Handler
192 Extensible Jib
194 Extensible jib with winch
196 Extension Jib
199 Extension Jib with winch
203 Frame Mounted Hook
206 Heavy Duty Frame Mounted Hook
208 Swing Jib

2-HOOK JIB

- 2 capacity / outreach couples.
- Safety: homologated swivel self locking hook.
- Robust solution for handling suspended loads.
- Jib fitted with 2 hooks to meet various needs of building sites.
- Adaptability for all yard handling applications

	P 9 T	P 4000	P 6000
Max. outreach (mm)	470	708	808
Capacity (kg)	9000	4000	6000
Capacity 2 (kg)	5000	1200	2000
Capacity 3 (kg)	2000	-	-
Max @ outreach 2 (mm)	1385	2708	2708
Max @ outreach 3 (mm)	2300	-	-
Overall height (mm)	-	625	625
Width (mm)	815	830	830
Length (mm)	2518000	2838	2838
Overall weight (kg)	295	210	282
Machine Equipement	X	X	X

Machines compatibility			
Reference number	**-**	**653226**	**653227**
Reference number E-RECO	**930830**	**921321**	**921322**
MRT 1640 Easy T4 S2 360°	-	X	X
MRT 1645 75	X	X	X
MRT 1645 115	X	X	X
MRT 1840 Easy T4 S2 360°	-	X	X
MRT 1840 Easy T4 S2 400°	-	X	X
MRT 1845 75	X	X	X
MRT 1845 115	X	X	X
MRT 2145 115	X	X	X
MRT 2145 Easy T4 S2 360°	-	X	X
MRT 2145 Easy T4 S2 400°	-	X	X
MRT 2150 Privilege Plus	-	X	X
MRT 2260	X	-	-
MRT 2470 Privilege Plus	X	X	X
MRT 2545 115	X	X	X
MRT 2545 Easy T4 S2 360°	-	X	X
MRT 2545 Easy T4 S2 400°	-	X	X
MRT 2550 Privilege Plus	-	X	X
MRT 2570	X	-	-
MRT 2660	X	-	-
MRT 3050 Privilege Plus	-	X	X
MRT 3060	X	-	-
MRT 3255 Privilege Plus	-	X	X
MRT 3570	X	-	-
MRT 3570 ES	X	-	-
MRT-X 1640 Easy 360°	-	X	X
MRT-X 1640 Easy 400°	-	X	X
MRT-X 1645	X	X	X
MRT-X 1840 Easy 360°	-	X	X
MRT-X 1840 Easy 400°	-	X	X
MRT-X 1845	X	X	X
MRT-X 2145	X	X	X

	P 9 T	P 4000	P 6000
Machines compatibility			
MRT-X 2150 Privilege Plus	-	X	X
MRT-X 2260	X	-	-
MRT-X 2470 Privilege Plus	X	X	X
MRT-X 2545	X	X	X
MRT-X 2545 Easy 360°	-	X	X
MRT-X 2545 Easy 400°	-	X	X
MRT-X 2550 Privilege Plus	-	X	X
MRT-X 2570	X	-	-
MRT-X 2660	X	-	-
MRT-X 3050 Privilege Plus	-	X	X
MRT-X 3060	X	-	-
MRT-X 3255 Privilege Plus	-	X	X
MRT-X 3570	X	-	-
MRT-X 3570 ES	X	-	-
MT 733 Easy	-	X	-
MT 933 Easy	-	X	-
MT 1033 easy	-	X	-
MT 1135	-	X	-
MT 1135 easy ST5	-	X	-
MT 1135 H easy ST5	-	X	-
MT 1135 HA Easy ST5	-	X	-
MT 1440	-	X	-
MT 1440 A	-	X	-
MT 1440 HA	-	X	-
MT 1840	-	X	-
MT 1840 A	-	X	-
MT 1840 easy ST5	-	X	-
MT 1840 HA	-	X	-
MT-X 1440	-	X	-
MT-X 1440 A	-	X	-
MT-X 1840	-	X	-
MT-X 1840 A	-	X	-

MANDATORY MACHINE EQUIPMENT: ✕

3-HOOK JIB

- 3 capacity / outreach couples.
- Safety: homologated swivel self locking hook.
- Perfect attachments for all heavy suspended loads.
- Jib fitted with 3 hooks to meet various needs of building sites.
- Adaptability for all yard handling applications.

	P 9 T	P 13 T	P 18 T	P 25 T	P 36 T
Max. outreach (mm)	470	700	700	700	905
Capacity (kg)	9000	13000	18000	25000	36000
Capacity 2 (kg)	5000	10000	14000	18000	16000
Capacity 3 (kg)	2000	7500	10000	13000	10000
Max @ outreach 2 (mm)	1385	1350	1350	1250	2005
Max @ outreach 3 (mm)	2300	2000	2000	1800	3000
Width (mm)	815	800	830	850	1170
Length (mm)	2518	2215	2215	2085	3351
Overall weight (kg)	295	560	570	890	1490
Machine Equipement	X	X	X	X	X

Machines compatibility					
Reference number E-RECO	930830	53009841	53011885	53010431	52604320
MHT 790	X	-	-	-	-
MHT 10130	-	X	-	-	-
MHT 10180	-	-	X	-	-
MHT 10230	-	-	-	X	-
MHT 12330	-	-	-	X	X
MHT-X 790	X	-	-	-	-
MHT-X 10130	-	X	-	-	-
MHT-X 10180	-	-	X	-	-
MHT-X 10230	-	-	-	X	-
MRT 1645 75	X	-	-	-	-
MRT 1645 115	X	-	-	-	-
MRT 1845 75	X	-	-	-	-
MRT 1845 115	X	-	-	-	-
MRT 2145 115	X	-	-	-	-
MRT 2260	X	-	-	-	-
MRT 2470 Privilege Plus	X	-	-	-	-
MRT 2545 115	X	-	-	-	-
MRT 2570	X	-	-	-	-
MRT 2660	X	-	-	-	-
MRT 3060	X	-	-	-	-
MRT 3570	X	-	-	-	-
MRT 3570 ES	X	-	-	-	-
MRT-X 1645	X	-	-	-	-
MRT-X 1845	X	-	-	-	-
MRT-X 2145	X	-	-	-	-
MRT-X 2260	X	-	-	-	-
MRT-X 2470 Privilege Plus	X	-	-	-	-
MRT-X 2545	X	-	-	-	-
MRT-X 2570	X	-	-	-	-
MRT-X 2660	X	-	-	-	-
MRT-X 3060	X	-	-	-	-
MRT-X 3570	X	-	-	-	-
MRT-X 3570 ES	X	-	-	-	-

MANDATORY MACHINE EQUIPMENT: X

BIG BAG HANDLER

- Total capacity of 2400 kg.
- 4 loading points with 600 kg capacity each.
- 4 bag stoppers mounted on each loading point- limit the risk of bag falling.
- Anti-swing bag stabilizer, increases stability.
- Increases efficiency & safety of big bag handling.
- Main structure made of tubes- limits the risk of bag damages & fall.
- Elevated structure- prevents any damage of trailer's roof while loading.
- Handles indifferently big bags with 1, 2 or 4 ears.

	HBB 1500 / 2400	HBB 2100 / 4000
Capacity (kg)	2400	4000
Fork spread (mm)	700	700
Overall height (mm)	1322	1322
Width (mm)	1356	1356
Length (mm)	1648	1913
Depth (mm)	1300	2103
Overall weight (kg)	186	285
Machine Equipement	X	X
Carriage type	Manitou	Manitou

Machines compatibility		
Reference number	**931627**	**52691660**
Skid Steer Carriage reference	**52578030**	**-**
MLA-T 533-145 V+ - ST5	X	-
MLT 625-75 H	X	-
MLT 630-105 ST4	X	-
MLT 630-105 V CP ST4	X	-
MLT 630-105 V ST4	X	-
MLT 630-115	X	-
MLT 630-115 V	X	-
MLT 630-115 V CP	X	-
MLT 635-130 PS+	X	-
MLT 635-140 V+	X	-
MLT 730-115 V	X	-
MLT 730-115 V CP	X	-
MLT 730-115 V CP ST4	X	-
MLT 733-115	X	-
MLT 733-115 LSU	X	-
MLT 733-115 ST4	X	-
MLT 737-130 PS+	X	-
MLT 737-130 PS+ ST4	X	-
MLT 741-130 PS+	X	-
MLT 840-145 PS+	X	-
MLT 841-145 PS+	X	-
MLT 845-100 H	X	-
MLT 845-120	X	-
MLT 940-140 V+	X	-
MLT 961-145 V+ L	X	X
MLT 961-160 V+ L	X	X
MLT 1040-145 PS+ L	X	-
MLT 1041-145 PS+L	X	-
MLT-X 625-75 H	X	-
MLT-X 732	X	-
MLT-X 735 T LSU	X	-
MLT-X 737-130 PS+	X	-
MLT-X 840-140 PS+	X	-

	HBB 1500 / 2400	HBB 2100 / 4000
Machines compatibility		
MLT-X 841 - 145 PS+	X	-
MLT-X 845-120	X	-
MLT-X 845-120 H	X	-
MLT-X 961-145 V+ L	X	X
MLT-X 961-160 V+ L	X	X
MLT-X 1040-140 PS+ L	X	-
MLT-X 1041-145 PS+L	X	-
MRT 1640 Easy 3B S2 360°	X	-
MRT 1640 Easy 3B S2 400°	X	-
MRT 1640 Easy T4 S2 360°	X	-
MRT 1840 Easy T4 S2 360°	X	-
MRT 1840 Easy T4 S2 400°	X	-
MRT 2145 Easy 3B S2 360°	X	-
MRT 2145 Easy 3B S2 400°	X	-
MRT 2145 Easy T4 S2 360°	X	-
MRT 2145 Easy T4 S2 400°	X	-
MRT 2470 Privilege Plus	X	-
MRT 2545 Easy 3B S2 360°	X	-
MRT 2545 Easy 3B S2 400°	X	-
MRT 2545 Easy T4 S2 360°	X	-
MRT 2545 Easy T4 S2 400°	X	-
MRT 3050 Privilege Plus	X	-
MRT 3255 Privilege Plus	X	-
MRT-X 1440 Easy 400°	X	-
MRT-X 1640 Easy 360°	X	-
MRT-X 1640 Easy 400°	X	-
MRT-X 1840 Easy 360°	X	-
MRT-X 1840 Easy 400°	X	-
MRT-X 2470 Privilege Plus	X	-
MRT-X 2545 Easy 360°	X	-
MRT-X 2545 Easy 400°	X	-
MRT-X 3050 Privilege Plus	X	-
MRT-X 3255 Privilege Plus	X	-
MT 420 H	X	-
MT 625 HA	X	-
MT 733 Easy	X	-
MT 933 Easy	X	-
MT 1033 easy	X	-
MT 1135	X	-
MT 1135 H easy ST5	X	-
MT 1335	X	-
MT 1440	X	-
MT 1440 A	X	-
MT 1440 HA	X	-

	HBB 1500 / 2400	HBB 2100 / 4000
Machines compatibility		
MT 1840	X	-
MT 1840 A	X	-
MT 1840 HA	X	-
MT-X 625 H	X	-
MT-X 733	X	-
MT-X 1033	X	-
MT-X 1440	X	-
MT-X 1440 A	X	-
MT-X 1840	X	-
MT-X 1840 A	X	-

MANDATORY MACHINE EQUIPMENT: ╳

EXTENSIBLE JIB

- Capacity 600 kg @ 4 m/300 kg @ 5 m/100 kg @ 6 m.
- Safety: homologated rotating truss hook.
- Safety: self-locking, rotating homologated hook.
- Easy and safe manual extension.
- Integrated stabilizer for easy storage.
- Simple & safe solution for the handling & the placement of roof trusses (packed or separated).
- User-friendly: dedicated truss hook & standard hook allowing the use as an extension jib.
- Maximum visibility during transport: adapted attachment design that allows driving the machine with a lowered machine boom.
- Increased safety with the dedicated truss hook: no need to climb on the trusses to release them once placed.
- Simple & durable attachment.

	JE 6000 / 600
Max. outreach (mm)	3895
Capacity (kg)	600
Capacity 2 (kg)	300
Capacity 3 (kg)	100
Max @ outreach 2 (mm)	4845
Max @ outreach 3 (mm)	5845
Width (mm)	815
Length (mm)	4347
Overall weight (kg)	265
Machine Equipement	X

Machines compatibility	
Reference number	**939995**
MT 733 Easy	X
MT 933 Easy	X
MT 1033 easy	X
MT 1135	X
MT 1135 H easy ST5	X
MT 1335	X
MT 1440	X
MT 1440 A	X
MT 1440 HA	X
MT 1840	X
MT 1840 A	X
MT 1840 HA	X
MT-X 1440	X
MT-X 1440 A	X
MT-X 1840	X
MT-X 1840 A	X

MANDATORY MACHINE EQUIPMENT: X

EXTENSIBLE JIB WITH WINCH

- Oil immersed negative brake.
- Safety: homologated swivel self locking hook.
- Safety: end of cable/hook upper position automatic movement stop.
- Manual extension (manual winch) with adjustable jib length.
- Adjustable length for an excellent polyvalence (extension: manual jib).
- Suspended load handling solution for all type of building sites.
- Perfect for transporting and placing beams, frames and other light and bulky elements.
- Its telescopic boom allows to gain greater flexibility while keeping an important forward reach.
- Tubular structure designed for an optimal weight / rigidity ratio
- Excellent adaptability.

	JW 7000 / 1000 39M	PT 800
Max. outreach (mm)	4000	4525
Working height (mm)	35000	32000
Capacity (kg)	800	800
Capacity 2 (kg)	1000	1000
Max @ outreach 2 (mm)	7000	7183
Overall height (mm)	35000	-
Width (mm)	-	870
Length (mm)	-	4632
Overall weight (kg)	559	605
Cable length (mm)	37000	37000
Machine Equipement		+
Hook Speed (m/mn)	48	48

Machines compatibility		
Reference number E-RECO	**52717860**	**921323**
MRT 2150 Privilege Plus	-	X
MRT 2260	X	-
MRT 2470 Privilege Plus	-	X
MRT 2550 Privilege Plus	-	X
MRT 2570	X	-
MRT 2660	X	-
MRT 3050 Privilege Plus	-	X
MRT 3060	X	-
MRT 3570	X	-
MRT 3570 ES	X	-
MRT-X 2150 Privilege Plus	-	X
MRT-X 2260	X	-
MRT-X 2470 Privilege Plus	-	X
MRT-X 2550 Privilege Plus	-	X
MRT-X 2570	X	-
MRT-X 2660	X	-
MRT-X 3050 Privilege Plus	-	X
MRT-X 3060	X	-
MRT-X 3570	X	-
MRT-X 3570 ES	X	-

MANDATORY MACHINE EQUIPMENT: +

EXTENSION JIB

- Wide range of extension jibs from 600 kg to 2000 kg.
- Forward reach max from 4 m to 2.5 m.
- Safety: homologated swivel self locking hook.
- Extension jibs also available in winch version.
- Simple and light solution to handle suspended loads.
- Perfect for transporting and placing beams, frames and other light and bulky elements
- Its design allows to reach narrow areas and also improves the forward reach of the telehandler.
- Tubular structure designed for an optimal weight/rigidity ratio.

	P 600	P 1000	P 1500	P 2000
Max. outreach (mm)	3797	3797	2677	2336
Capacity (kg)	600	1000	1500	2000
Width (mm)	815	815	815	815
Length (mm)	4118	4120	2956	2479
Overall weight (kg)	210	210	186	190
Machine Equipement	X	X	X	X

Machines compatibility				
Reference number	**653228**	**-**	**-**	**-**
Reference number E-RECO	**921316**	**921317**	**921319**	**921320**
MRT 1640 Easy T4 S2 360°	X	X	X	X
MRT 1840 Easy T4 S2 360°	X	X	X	X
MRT 1840 Easy T4 S2 400°	X	X	X	X
MRT 2145 Easy T4 S2 360°	X	X	X	X
MRT 2145 Easy T4 S2 400°	X	X	X	X
MRT 2150 Privilege Plus	X	X	X	X
MRT 2470 Privilege Plus	X	X	X	X
MRT 2545 Easy T4 S2 360°	X	X	X	X
MRT 2545 Easy T4 S2 400°	X	X	X	X
MRT 2550 Privilege Plus	X	X	X	X
MRT 3050 Privilege Plus	X	X	X	X
MRT 3255 Privilege Plus	X	-	X	X
MRT-X 1640 Easy 360°	X	X	X	X
MRT-X 1640 Easy 400°	X	X	X	X
MRT-X 1840 Easy 360°	X	X	X	X
MRT-X 1840 Easy 400°	X	X	X	X
MRT-X 2150 Privilege Plus	X	X	X	X
MRT-X 2470 Privilege Plus	X	X	X	X
MRT-X 2545 Easy 360°	X	X	X	X
MRT-X 2545 Easy 400°	X	X	X	X
MRT-X 2550 Privilege Plus	X	X	X	X
MRT-X 3050 Privilege Plus	X	X	X	X
MRT-X 3255 Privilege Plus	X	-	X	X
MT 733 Easy	X	-	-	-
MT 933 Easy	X	-	-	-
MT 1033 easy	X	-	-	-
MT 1135	X	-	-	-
MT 1135 H easy ST5	X	-	-	-
MT 1135 HA Easy ST5	X	-	-	-
MT 1335	X	-	-	-
MT 1335 HA easy ST5	X	-	-	-
MT 1440	X	-	-	-
MT 1440 A	X	-	-	-
MT 1440 HA	X	-	-	-
MT 1840	X	-	-	-
MT 1840 A	X	-	-	-

	P 600	P 1000	P 1500	P 2000
Machines compatibility				
MT 1840 HA	X	-	-	-
MT-X 1440	X	-	-	-
MT-X 1440 A	X	-	-	-
MT-X 1840	X	-	-	-
MT-X 1840 A	X	-	-	-

MANDATORY MACHINE EQUIPMENT: ╳

EXTENSION JIB WITH WINCH

- Wide range of crane with winch from 600 kg to 2000 kg with a forward reach max. from 4 m to 2.5 m.
- Oil immersed negative brakes.
- Safety: homologated swil self locking hook.
- Limit switch sensor (up and down).
- Handling solution for suspended loads for all type of building sites.
- Turn your telehandler into a crane.
- Perfect for transporting and placing beams, frames and other suspended loads.
- Improves the forward reach of the telehandler.
- Its winch allows to gain greater flexibility while keeping an important forward reach.
- Tubular structure designed for an optimal weight/rigidity ratio.

	JW 884	JW 2500 / 2000 22M	JW 2500 / 2000 35M	JW 3000 / 1500 44M	JW 4100 / 600 68M	JW 4100 / 1000 34M
Max. outreach (mm)	4104	2517	2517	3008	4140	4104
Working height (mm)	27000	24000	24000	35000	38000	27000
Capacity (kg)	884	2000	2000	1500	600	1000
Overall height (mm)	-	-	-	893	-	-
Width (mm)	-	-	-	815	-	-
Length (mm)	-	-	-	2990	-	-
Overall weight (kg)	299	354	354	324	94	299
Cable length (mm)	56000	49000	70000	37000	40000	56000
Cable loop	1	1	1	Direct	Direct	1
Machine Equipement						
Hook Speed (m/mn)	44	24	24	35	94	44

Machines compatibility						
Reference number	-	-	-	-	-	-
Reference number E-RECO	52718275	52718250	52717582	52717710	52719496	52719497
MRT 1645 75	-	X	X	X	X	X
MRT 1645 115	-	X	X	X	X	X
MRT 1845 75	-	X	X	X	X	X
MRT 1845 115	-	X	X	X	X	X
MRT 2145 115	-	X	X	X	X	X
MRT 2260	X	X	X	X	X	X
MRT 2545 115	-	X	X	X	X	X
MRT 2570	X	X	X	X	X	X
MRT 2660	X	X	X	X	X	X
MRT 3060	X	X	X	X	X	X
MRT 3570	X	X	X	X	X	X
MRT 3570 ES	X	X	X	X	X	X
MRT-X 1645	-	X	X	X	X	X
MRT-X 1845	-	X	X	X	X	X
MRT-X 2145	-	X	X	X	X	X
MRT-X 2260	X	X	X	X	X	X
MRT-X 2545	-	X	X	X	X	X
MRT-X 2570	X	X	X	X	X	X
MRT-X 2660	X	X	X	X	X	X
MRT-X 3060	X	X	X	X	X	X
MRT-X 3570	X	X	X	X	X	X
MRT-X 3570 ES	X	X	X	X	X	X

MANDATORY MACHINE EQUIPMENT: +

	PT 600	PT 1000	PT 1500	PT 2000 (a)	PT 2000 (b)
Max. outreach (mm)	4104	4104	2633	2008	2008
Working height (mm)	38000	27000	35000	24000	24000
Capacity (kg)	600	1000	1500	2000	2000
Overall height (mm)	38000	27000	893	24000	24000
Width (mm)	815	815	815	815	815
Length (mm)	40000	56000	2887	2388	2387
Overall weight (kg)	278	299	324	360	354
Cable length (mm)	40000	56000	37000	49000	70000
Cable loop	Direct	1	Direct	1	1
Machine Equipement					
Hook Speed (m/mn)	94	44	48	24	24

Machines compatibility					
Reference number	**708538**	**-**	**-**	**-**	**-**
Reference number E-RECO	**921325**	**921326**	**921330**	**921331**	**939392**
MRT 1440 Easy T4 S2 400°	X	X	X	-	-
MRT 1640 Easy T4 S2 360°	X	X	X	X	-
MRT 1640 Easy T4 S2 400°	X	X	X	-	-
MRT 1840 Easy T4 S1 360°	-	X	-	-	-
MRT 1840 Easy T4 S1 400°	-	X	-	-	-
MRT 1840 Easy T4 S2 360°	X	X	X	X	-
MRT 1840 Easy T4 S2 400°	X	X	X	X	-
MRT 2145 Easy T4 S2 360°	X	X	X	X	-
MRT 2145 Easy T4 S2 400°	X	X	X	X	-
MRT 2150 Privilege Plus	X	X	X	X	-
MRT 2470 Privilege Plus	X	-	X	-	X
MRT 2545 Easy T4 S2 360°	X	X	X	X	X
MRT 2545 Easy T4 S2 400°	X	X	X	X	X
MRT 2550 Privilege Plus	X	X	X	-	X
MRT 3050 Privilege Plus	X	X	X	-	X
MRT 3255 Privilege Plus	X	-	X	-	X
MRT-X 1440 Easy 400°	X	X	X	X	-
MRT-X 1640 Easy 360°	X	X	X	X	-
MRT-X 1640 Easy 400°	X	X	X	X	-
MRT-X 1840 Easy 360°	X	X	X	X	-
MRT-X 1840 Easy 400°	X	X	X	X	-
MRT-X 2145 Easy 360°	X	X	X	-	-
MRT-X 2145 Easy 400°	X	X	X	-	-
MRT-X 2150 Privilege Plus	X	X	X	X	-
MRT-X 2470 Privilege Plus	X	-	X	-	X
MRT-X 2545 Easy 360°	X	X	X	X	X
MRT-X 2545 Easy 400°	X	X	X	X	X
MRT-X 2550 Privilege Plus	X	X	X	-	X
MRT-X 3050 Privilege Plus	X	X	X	-	X
MRT-X 3255 Privilege Plus	X	-	X	-	X
MT 733 Easy	X	-	-	-	-

	PT 600	PT 1000	PT 1500	PT 2000 (a)	PT 2000 (b)
Machines compatibility					
MT 933 Easy	X	-	-	-	-
MT 1033 easy	X	-	-	-	-
MT 1440	X	-	-	-	-
MT 1440 A	X	-	-	-	-
MT 1440 HA	X	-	-	-	-
MT 1840	X	-	-	-	-
MT 1840 A	X	-	-	-	-
MT-X 733	X	-	-	-	-
MT-X 1033	X	-	-	-	-
MT-X 1440	X	-	-	-	-
MT-X 1440 A	X	-	-	-	-
MT-X 1840	X	-	-	-	-
MT-X 1840 A	X	-	-	-	-

MANDATORY MACHINE EQUIPMENT: +

FRAME MOUNTED HOOK

- Range from 4000 kg to 6000 kg capacity.
- Directly hitched on carriage.
- Safety: homologated swivel self locking hook.
- Simple and cost efficient solutions for suspended load handling.
- Very compact attachment that preseves machine stability.
- Perfect for transporting construction elements and other loads present in construction or industrial sites.

	PC 50	PC 60	PC 90
Max. outreach (mm)	475	475	260
Capacity (kg)	5000	6000	9000
Overall height (mm)	500	500	-
Width (mm)	815	815	-
Length (mm)	606	606	-
Overall weight (kg)	120	120	129
Machine Equipement	X	X	X

Machines compatibility			
Reference number	**708544**	**939050**	**-**
Reference number E-RECO	**921335**	**939050**	**939970**
Skid Steer Carriage reference	**52579090**	**-**	**-**
MHT-X 860 S2	-	X	-
MLT 625-75 H	X	-	-
MLT 845-100 H	X	-	-
MLT 845-120	X	-	-
MLT 961-145 V+ L	X	X	-
MLT 961-160 V+ L	-	X	-
MLT-X 625-75 H	X	-	-
MLT-X 845-120	X	-	-
MLT-X 845-120 H	X	-	-
MLT-X 961-145 V+ L	X	X	-
MLT-X 961-160 V+ L	-	X	-
MRT 1640 Easy T4 S2 360°	X	-	-
MRT 1645 75	X	-	-
MRT 1645 115	X	-	-
MRT 1840 Easy T4 S2 360°	X	-	-
MRT 1840 Easy T4 S2 400°	X	-	-
MRT 1845 75	X	-	-
MRT 1845 115	X	-	-
MRT 2145 115	X	-	-
MRT 2145 Easy T4 S2 360°	X	-	-
MRT 2145 Easy T4 S2 400°	X	-	-
MRT 2150 Privilege Plus	X	-	-
MRT 2260	X	X	X
MRT 2470 Privilege Plus	X	X	-
MRT 2545 115	X	-	-
MRT 2545 Easy T4 S2 360°	X	-	-
MRT 2545 Easy T4 S2 400°	X	-	-
MRT 2550 Privilege Plus	X	-	-
MRT 2570	X	X	X
MRT 2660	X	X	X
MRT 3050 Privilege Plus	X	-	-
MRT 3060	X	X	X
MRT 3255 Privilege Plus	X	X	-
MRT 3570	X	X	X

	PC 50	PC 60	PC 90
Machines compatibility			
MRT 3570 ES	X	X	X
MRT-X 1440 Easy 400°	X	-	-
MRT-X 1640 Easy 360°	X	-	-
MRT-X 1640 Easy 400°	X	-	-
MRT-X 1645	X	-	-
MRT-X 1840 Easy 360°	X	-	-
MRT-X 1840 Easy 400°	X	-	-
MRT-X 1845	X	-	-
MRT-X 2145	X	-	-
MRT-X 2150 Privilege Plus	X	-	-
MRT-X 2260	X	X	X
MRT-X 2470 Privilege Plus	X	X	-
MRT-X 2545	X	-	-
MRT-X 2545 Easy 360°	X	-	-
MRT-X 2545 Easy 400°	X	-	-
MRT-X 2550 Privilege Plus	X	-	-
MRT-X 2570	X	X	X
MRT-X 2660	X	X	X
MRT-X 3050 Privilege Plus	X	-	-
MRT-X 3060	X	X	X
MRT-X 3255 Privilege Plus	X	X	-
MRT-X 3570	X	X	X
MRT-X 3570 ES	X	X	X
MT 420 H	X	-	-
MT 625 HA	X	-	-
MT 733 Easy	X	-	-
MT 933 Easy	X	-	-
MT 1033 easy	X	-	-
MT 1135	X	-	-
MT 1335	X	-	-
MT 1440	X	-	-
MT 1440 A	X	-	-
MT 1440 HA	X	-	-
MT 1840	X	-	-
MT 1840 A	X	-	-
MT 1840 HA	X	-	-
MT-X 625 H	X	-	-
MT-X 733	X	-	-
MT-X 1033	X	-	-
MT-X 1440	X	-	-
MT-X 1440 A	X	-	-
MT-X 1840	X	-	-
MT-X 1840 A	X	-	-

MANDATORY MACHINE EQUIPMENT: X

HEAVY DUTY FRAME MOUNTED HOOK

- Suspended load capacity up to 12000 kg.
- Safety: Homologated swivel self locking hook.
- Efficient and heavy duty suspended load solution.
- Directly hitched on carriage for secured application.
- Very compact attachment that preserves machine stability.

	PC 9 T	PC 13 T	PC 18 T	PC 23 T
Max. outreach (mm)	260	700	700	700
Capacity (kg)	9000	13000	18000	22000
Overall height (mm)	520	555	-	-
Width (mm)	815	800	830	850
Length (mm)	425	945	943	985
Overall weight (kg)	129	305	340	460
Machine Equipement	X	X	X	X

Machines compatibility				
Reference number E-RECO	939970	53008009	-	53008289
Reference E-RECO (non-standard)	-	-	53011879	-
MHT 790	X	-	-	-
MHT 10130	-	X	-	-
MHT 10180	-	-	X	-
MHT 10230	-	-	-	X
MHT-X 790	X	-	-	-
MHT-X 10130	-	X	-	-
MHT-X 10180	-	-	X	-
MHT-X 10230	-	-	-	X
MRT 2260	X	-	-	-
MRT 2470 Privilege Plus	X	-	-	-
MRT 2570	X	-	-	-
MRT 2660	X	-	-	-
MRT 3060	X	-	-	-
MRT 3570	X	-	-	-
MRT 3570 ES	X	-	-	-
MRT-X 2260	X	-	-	-
MRT-X 2470 Privilege Plus	X	-	-	-
MRT-X 2570	X	-	-	-
MRT-X 2660	X	-	-	-
MRT-X 3060	X	-	-	-
MRT-X 3570	X	-	-	-
MRT-X 3570 ES	X	-	-	-

MANDATORY MACHINE EQUIPMENT: X

SWING JIB

- Single-hook jib fitted with a 15°/15° rotation rotation.
- Hydraulic rotation for more accuracy.
- Simple & strong attachment.
- Homologated, rotating self locking hook.
- Easy load placement directly from the cab.
- Especially interesting to place loads in narrow spaces.
- Improves efficiency-less time lost placing the machine.
- Placement through rotation, not side shift = load moves backward when the jib swings.

	PO 600 / 2500	PO 1000 / 1500	PO 2000 / 1000
Max. outreach (mm)	2500	1500	1000
Capacity (kg)	600	1000	2000
Overall height (mm)	842	842	842
Width (mm)	830	830	830
Length (mm)	2874	1874	1374
Overall weight (kg)	320	275	255
Machine Equipement			
Hydraulic system	Yes	Yes	Yes
Rotation 1	15	15	15

Machines compatibility			
Reference number	**784641**	**784642**	**784643**
MT 733 Easy	X	X	X
MT 933 Easy	X	X	X
MT 1033 easy	X	X	X
MT 1440	X	X	X
MT 1440 A	X	X	X
MT 1440 easy ST5	X	-	-
MT 1440 HA	X	X	X
MT 1840	X	X	X
MT 1840 A	X	X	X
MT 1840 easy ST5	X	X	X
MT 1840 HA	X	X	X
MT-X 733	X	X	X
MT-X 1033	X	X	X
MT-X 1440	X	X	X
MT-X 1440 A	X	X	X
MT-X 1840	X	X	X
MT-X 1840 A	X	X	X

MANDATORY MACHINE EQUIPMENT:

PLATFORM

Range

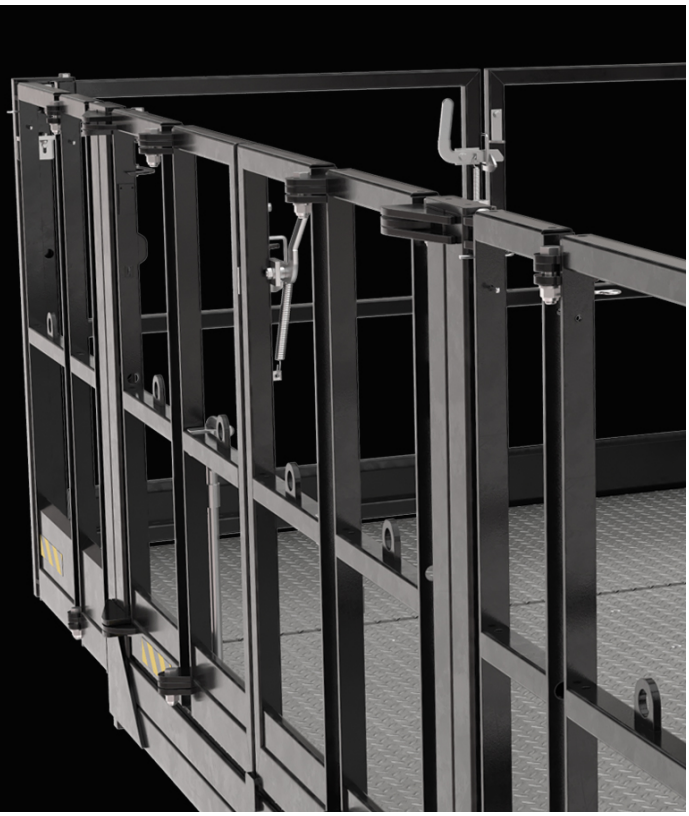

211 Aerial Jib 1
213 Aerial Jib 2
216 Alureach Platform
218 Deep Extensible Platform
221 Extensible Platform
225 Fast Opening Platform
230 Fixed Slewing Roofer Platform
233 Platform
236 Platform with dismountable fops roof
239 Platform with Winch
242 Raised Extensible Platform
245 Roofer Platform
248 System 3D

AERIAL JIB 1

- 90° rotation on both sides of the basket.
- Basket width: 2690mm.
- Legally approved for 2 persons.
- Telescopic boom (1630 mm).
- Maximum safety in people lifting.
- Positive work area for applications.
- Wide basket and substantial basket capacity.

	Aerial Jib 1
Capacity including people (kg)	365
Number of people	2
Width (mm)	2690
Length (mm)	4414
Overall weight (kg)	930
Machine Equipement	+
Rotation 1	180

Machines compatibility	
Reference number E-RECO	**921292**
Reference number E-RECO 2	**53027148**
MRT 1640 Easy T4 S2 360°	X
MRT 1840 Easy T4 S2 360°	X
MRT 1840 Easy T4 S2 400°	X
MRT 2145 Easy T4 S2 360°	X
MRT 2145 Easy T4 S2 400°	X
MRT 2150 Privilege Plus	X
MRT 2470 Privilege Plus	X
MRT 2545 Easy T4 S2 360°	X
MRT 2545 Easy T4 S2 400°	X
MRT 2550 Privilege Plus	X
MRT 3050 Privilege Plus	X
MRT 3255 Privilege Plus	X
MRT-X 1440 Easy 400°	X
MRT-X 1640 Easy 360°	X
MRT-X 1640 Easy 400°	X
MRT-X 1840 Easy 360°	X
MRT-X 1840 Easy 400°	X
MRT-X 2150 Privilege Plus	X
MRT-X 2470 Privilege Plus	X
MRT-X 2545 Easy 360°	X
MRT-X 2545 Easy 400°	X
MRT-X 2550 Privilege Plus	X
MRT-X 3050 Privilege Plus	X
MRT-X 3255 Privilege Plus	X

AERIAL JIB 2

- 344° total boom rotation of the attachment.
- Basket width: 1200 mm x depth 800 mm.
- Legally approved for 2 persons.
- Wide stand for maximum stability during positive/negative position switch.
- Telescopic boom (2300 mm).
- Maximum safety in people.
- Positive work area (+ 9.3 m).
- Negative work area (- 6.4 m).
- Forward reach work area (+ 6.81 m).

	Aerial Jib 2	AERIAL JIB (2)
Capacity including people (kg)	200	200
Number of people	2	2
Overall height (mm)	2823	2823
Width (mm)	1200	1200
Length (mm)	4492	4492
Depth (mm)	800	800
Overall weight (kg)	1200	1200
Machine Equipement	+	-
Rotation 1	344	344

Machines compatibility		
Reference number E-RECO	**921293**	**53027154**
Reference number E-RECO 2	**-**	**52719269**
MRT 1440 Easy T4 S2 400°	X	-
MRT 1640 Easy T4 S2 360°	X	-
MRT 1640 Easy T4 S2 400°	X	-
MRT 1645 75	-	X
MRT 1645 115	-	X
MRT 1840 Easy T4 S2 360°	X	-
MRT 1840 Easy T4 S2 400°	X	-
MRT 1845 75	-	X
MRT 1845 115	-	X
MRT 2145 115	-	X
MRT 2145 Easy T4 S2 360°	X	-
MRT 2145 Easy T4 S2 400°	X	-
MRT 2150 Privilege Plus	X	-
MRT 2470 Privilege Plus	X	X
MRT 2545 115	-	X
MRT 2545 Easy T4 S2 360°	X	-
MRT 2545 Easy T4 S2 400°	X	-
MRT 3050 Privilege Plus	X	X
MRT 3255 Privilege Plus	X	-
MRT-X 1440 Easy 400°	X	-
MRT-X 1640 Easy 360°	X	-
MRT-X 1640 Easy 400°	X	-
MRT-X 1645	-	X
MRT-X 1840 Easy 360°	X	-
MRT-X 1840 Easy 400°	X	-
MRT-X 1845	-	X
MRT-X 2145	-	X
MRT-X 2145 Easy 360°	X	-
MRT-X 2145 Easy 400°	X	-
MRT-X 2150 Privilege Plus	X	-
MRT-X 2470 Privilege Plus	X	X
MRT-X 2545	-	X
MRT-X 2545 Easy 360°	X	-

	Aerial Jib 2	AERIAL JIB (2)
Machines compatibility		
MRT-X 2545 Easy 400°	X	-
MRT-X 3050 Privilege Plus	X	X
MRT-X 3255 Privilege Plus	X	-

MANDATORY MACHINE EQUIPMENT: +

ALUREACH PLATFORM

- Basket 100 % made of aluminium (rotation: steel).
- EN 280-compliant : handrails for passengers, harness locking points etc.
- 3 slidding bar entries (1 front, 1 left, 1 right).
- Easy folding/unfolding, can be unfolded on 1 side only.
- + 1 m fordward reach vs steel version (PSE 4400/365).
- 150 kg lighter than steel.
- Gain in efficiency, do more from 1 machine position.
- Uncompromized safety.
- Easy access from each side of the basket, even when folded.
- Perfect adaptation to working conditions.

	PSE 4200 / 365 ALU
Capacity including people (kg)	365
Number of people	3
Overall height (mm)	1252
Width minimum (mm)	2340
Width maximum (mm)	4150
Length (mm)	2311
Depth (mm)	1260
Overall weight (kg)	500
Machine Equipement	
Rotation 1	180

Machines compatibility	
Reference number E-RECO	**939445**
MRT 2470 Privilege Plus	X
MRT 3050 Privilege Plus	X
MRT-X 2470 Privilege Plus	X
MRT-X 3050 Privilege Plus	X

MANDATORY MACHINE EQUIPMENT:

DEEP EXTENSIBLE PLATFORM

- 2m deep platform to facilitate the handling of bulky loads in the platform.
- Interesting for asbestos removal and 2nd fix applications- easy access & significant space to place tiles.

	NAC 2 2.5 / 4m 1000kg	ORH 2 2.5 / 4m 700kg	PFE 4000 / 1000 FD
Capacity including people (kg)	1000	700	1000
Number of people	3	3	3
Width minimum (mm)	2500	2500	2500
Width maximum (mm)	4000	4000	4000
Overall weight (kg)	1000	1300	1000
Working outreach (mm)	2000	2000	2000

Machines compatibility			
Reference number E-RECO	921355	921358	52719265
MRT 1645 75	-	-	X
MRT 1645 115	-	-	X
MRT 1845 75	-	-	X
MRT 1845 115	-	-	X
MRT 2145 115	-	-	X
MRT 2145 Easy T4 S2 360°	X	X	-
MRT 2145 Easy T4 S2 400°	X	X	-
MRT 2150 Privilege Plus	X	X	-
MRT 2260	-	-	X
MRT 2470 Privilege Plus	X	X	-
MRT 2545 115	-	-	X
MRT 2545 Easy T4 S2 360°	X	X	-
MRT 2545 Easy T4 S2 400°	X	X	-
MRT 2550 Privilege Plus	X	X	-
MRT 2570	-	-	X
MRT 2660	-	-	X
MRT 3050 Privilege Plus	X	X	-
MRT 3060	-	-	X
MRT 3570	-	-	X
MRT 3570 ES	-	-	X
MRT-X 1645	-	-	X
MRT-X 1845	-	-	X
MRT-X 2145	-	-	X
MRT-X 2145 Easy 360°	X	X	-
MRT-X 2145 Easy 400°	X	X	-
MRT-X 2150 Privilege Plus	X	X	-
MRT-X 2260	-	-	X
MRT-X 2470 Privilege Plus	X	X	-
MRT-X 2545	-	-	X
MRT-X 2545 Easy 360°	X	X	-
MRT-X 2545 Easy 400°	X	X	-
MRT-X 2550 Privilege Plus	X	X	-
MRT-X 2570	-	-	X
MRT-X 2660	-	-	X
MRT-X 3050 Privilege Plus	X	X	-
MRT-X 3060	-	-	X
MRT-X 3570	-	-	X

	NAC 2 2.5 / 4m 1000kg	ORH 2 2.5 / 4m 700kg	PFE 4000 / 1000 FD
Machines compatibility			
MRT-X 3570 ES	-	-	X

MANDATORY MACHINE EQUIPMENT:

EXTENSIBLE PLATFORM

- Capacity from 365 to 1000 kg.
- Slewing platform +/- 90° on both sides.
- Legally approved for 3 persons.
- Accessible from 3 sides.
- Overload sensor.
- Flexibility for people lifting applications.
- 2 different working widths available.
- Heavy duty and galvanized structure for an improved longevity.
- Non-slip metal floor.
- Expandable sides are independent.
- Fork sleeves for yard handling.

	NAC 2.45 / 5m 365 kg	NAC 2.45 / 5m 1000 kg	NAC 2.45 / 6m 365 kg	PSE 5000 / 365 D 3P	PSE 5000 / 1000 D 3P	PSE 6000 / 365 D 3P
Capacity including people (kg)	365	1000	365	365	1000	365
Number of people	3	3	3	3	3	3
Overall height (mm)	1300	1300	1300	1300	1300	1300
Width minimum (mm)	2450	2450	2450	2450	2450	2450
Width maximum (mm)	5000	5000	6000	5000	5000	6000
Length (mm)	2230	2230	2230	2230	2230	2230
Depth (mm)	1200	1200	1200	1200	1200	120
Overall weight (kg)	1020	1150	1210	1020	1150	1210
Machine Equipement				-	-	-
Rotation 1	180	180	180	180	180	180

Machines compatibility						
Reference number	-	788786	788784	-	-	-
Reference number E-RECO	921309	921308	921310	52719253	52719254	52719255
Reference number E-RECO 2	-	-	-	-	52719670	-
MHT 10130	X	-	-	-	-	-
MHT 10180	X	-	-	-	-	-
MHT 10230	X	-	-	-	-	-
MHT-X 10130	X	-	-	-	-	-
MHT-X 10180	X	-	-	-	-	-
MHT-X 10230	X	-	-	-	-	-
MRT 1440 Easy 3B S2 400°	-	-	X	-	-	-
MRT 1440 Easy T4 S1 400°	-	-	X	-	-	-
MRT 1440 Easy T4 S2 400°	-	-	X	-	-	-
MRT 1640 Easy 3B S2 360°	-	-	X	-	-	-
MRT 1640 Easy 3B S2 400°	-	-	X	-	-	-
MRT 1640 Easy T4 S1 360°	-	-	X	-	-	-
MRT 1640 Easy T4 S1 400°	-	-	X	-	-	-
MRT 1640 Easy T4 S2 360°	X	X	X	-	-	-
MRT 1640 Easy T4 S2 400°	-	-	X	-	-	-
MRT 1645 75	-	-	-	X	X	X
MRT 1645 115	-	-	-	X	X	X
MRT 1840 Easy 3B S2 360°	-	-	X	-	-	-
MRT 1840 Easy 3B S2 400°	-	-	X	-	-	-
MRT 1840 Easy T4 S1 360°	-	-	X	-	-	-
MRT 1840 Easy T4 S1 400°	-	-	X	-	-	-
MRT 1840 Easy T4 S2 360°	X	X	X	-	-	-
MRT 1840 Easy T4 S2 400°	X	X	X	-	-	-
MRT 1845 75	-	-	-	X	X	X
MRT 1845 115	-	-	-	X	X	X
MRT 2145 115	-	-	-	X	X	X
MRT 2145 Easy 3B S2 360°	-	-	X	-	-	-
MRT 2145 Easy 3B S2 400°	-	-	X	-	-	-
MRT 2145 Easy T4 S1 360°	-	-	X	-	-	-
MRT 2145 Easy T4 S1 400°	-	-	X	-	-	-
MRT 2145 Easy T4 S2 360°	X	X	X	-	-	-

	NAC 2.45 / 5m 365 kg	NAC 2.45 / 5m 1000 kg	NAC 2.45 / 6m 365 kg	PSE 5000 / 365 D 3P	PSE 5000 / 1000 D 3P	PSE 6000 / 365 D 3P
Machines compatibility						
MRT 2145 Easy T4 S2 400°	X	X	X	-	-	-
MRT 2150 Privilege Plus	X	X	X	-	-	-
MRT 2260	-	-	-	X	X	X
MRT 2470 Privilege Plus	X	X	X	-	-	-
MRT 2545 115	-	-	-	X	X	X
MRT 2545 Easy 3B S2 360°	-	-	X	-	-	-
MRT 2545 Easy 3B S2 400°	-	-	X	-	-	-
MRT 2545 Easy T4 S1 360°	-	-	X	-	-	-
MRT 2545 Easy T4 S1 400°	-	-	X	-	-	-
MRT 2545 Easy T4 S2 360°	X	X	X	-	-	-
MRT 2545 Easy T4 S2 400°	X	X	X	-	-	-
MRT 2550 Privilege Plus	X	X	X	-	-	-
MRT 2570	-	-	-	X	X	X
MRT 2660	-	-	-	X	X	X
MRT 3050 Privilege Plus	X	X	X	-	-	-
MRT 3060	-	-	-	X	X	X
MRT 3255 Privilege Plus	X	X	X	-	-	-
MRT 3570	-	-	-	X	X	X
MRT 3570 ES	-	-	-	X	X	X
MRT-X 1440 Easy 400°	X	X	X	-	-	-
MRT-X 1640 Easy 360°	X	X	X	-	-	-
MRT-X 1640 Easy 400°	X	X	X	-	-	-
MRT-X 1645	-	-	-	X	X	X
MRT-X 1840 Easy 360°	X	X	X	-	-	-
MRT-X 1840 Easy 400°	X	X	X	-	-	-
MRT-X 1845	-	-	-	X	X	X
MRT-X 2145	-	-	-	X	X	X
MRT-X 2145 Easy 360°	-	-	X	-	-	-
MRT-X 2145 Easy 400°	-	-	X	-	-	-
MRT-X 2150 Privilege Plus	X	X	X	-	-	-
MRT-X 2260	-	-	-	X	X	X
MRT-X 2470 Privilege Plus	X	X	X	-	-	-
MRT-X 2545	-	-	-	X	X	X
MRT-X 2545 Easy 360°	X	X	X	-	-	-
MRT-X 2545 Easy 400°	X	X	X	-	-	-
MRT-X 2550 Privilege Plus	X	X	X	-	-	-
MRT-X 2570	-	-	-	X	X	X
MRT-X 2660	-	-	-	X	X	X
MRT-X 3050 Privilege Plus	X	X	X	-	-	-
MRT-X 3060	-	-	-	X	X	X
MRT-X 3255 Privilege Plus	X	X	X	-	-	-
MRT-X 3570	-	-	-	X	X	X
MRT-X 3570 ES	-	-	-	X	X	X
MT 1440 A	-	X	X	-	-	-

	NAC 2.45 / 5m 365 kg	NAC 2.45 / 5m 1000 kg	NAC 2.45 / 6m 365 kg	PSE 5000 / 365 D 3P	PSE 5000 / 1000 D 3P	PSE 6000 / 365 D 3P
Machines compatibility						
MT 1440 HA	-	X	X	-	-	-
MT 1840 A	-	X	X	-	-	-
MT 1840 HA	-	X	X	-	-	-
MT-X 1440 A	-	X	X	-	-	-
MT-X 1840 A	-	X	X	-	-	-

MANDATORY MACHINE EQUIPMENT:

FAST OPENING PLATFORM

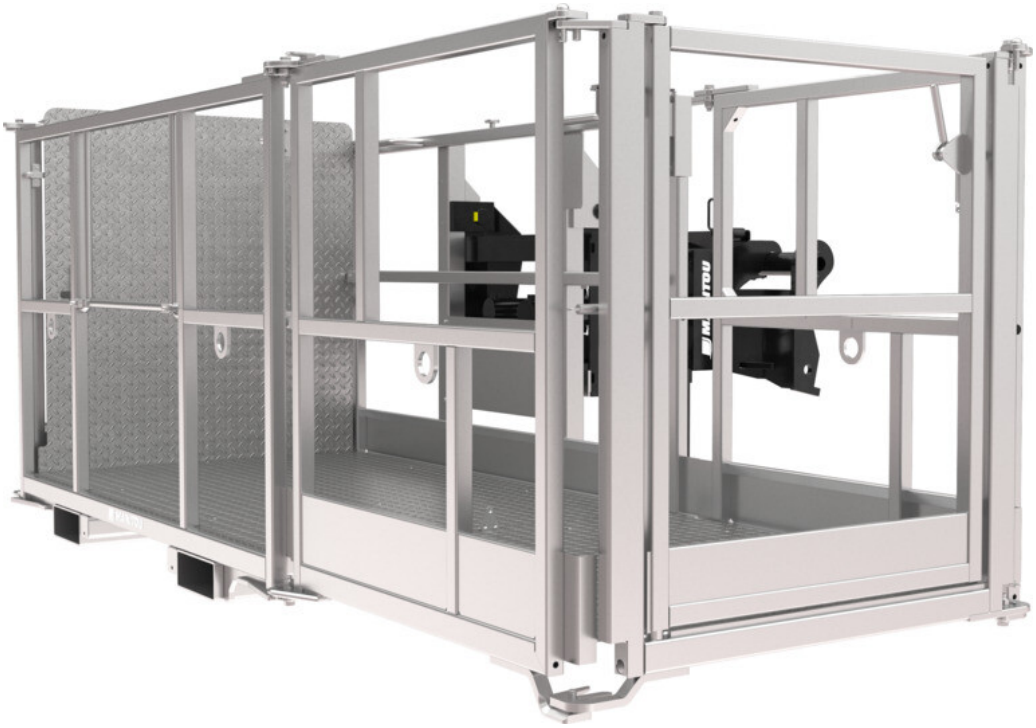

- Capacity 365/1000/700 kg including 3 people.
- Unfolded working width 4,4 m.
- Slewing platform +/- 90°on both sides.
- Legally approved for 3 persons.
- Accessible from 3 sides (2x Side + 1 front).
- version "D": right access with side door.
- version "DD": front and right access with side door.
- Overload sensor.
- Fork sleeves: 238 mm x 100 mm.
- Flexibility on aerial working situations.
- User-friendly opening system, complete opening/closing within 50 seconds.
- Heavy duty, galvanized structure for an improved longevity.
- Non-slip metal floor.
- Expandable sides are independent.
- Fork sleeves for yard handling.

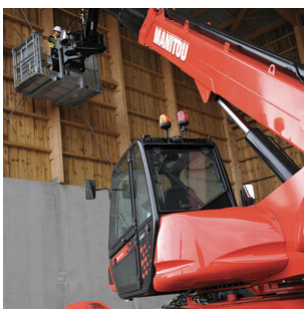

	PSE 4400 / 365	PSE 4400 / 365 (MRT)	PSE 4400 / 365 D	PSE 4400 / 365 D (MRT)	PSE 4400 / 365 DD
Capacity including people (kg)	365	365	365	365	365
Number of people	3	3	3	3	3
Overall height (mm)	1312	1312	1312	1312	1312
Width minimum (mm)	2282	2282	2282	2282	2282
Width maximum (mm)	4348	4348	4348	4348	4348
Length (mm)	2261	2261	2261	2261	2261
Depth (mm)	1150	1150	1150	1150	1150
Overall weight (kg)	-	-	670	670	690
Machine Equipement					
Rotation 1	180	180	180	180	180

Machines compatibility					
Reference number	**-**	**-**	**939021**	**-**	**53012073**
Reference number E-RECO	**914500**	**52719248**	**939750**	**52686224**	**53012074**
Reference number E-RECO 2	**939241**	**52719665**	**-**	**-**	**-**
MHT 790	X	-	-	-	-
MHT 10130	X	-	-	-	-
MHT 10180	X	-	-	-	-
MHT 10230	X	-	-	-	-
MHT-X 10130	X	-	-	-	-
MHT-X 10180	X	-	-	-	-
MHT-X 10230	X	-	-	-	-
MRT 1640 Easy T4 S2 360°	X	-	X	-	X
MRT 1645 75	-	X	-	X	-
MRT 1645 115	-	X	-	X	-
MRT 1840 Easy T4 S2 360°	X	-	X	-	X
MRT 1840 Easy T4 S2 400°	X	-	X	-	X
MRT 1845 75	-	X	-	X	-
MRT 1845 115	-	X	-	X	-
MRT 2145 115	-	X	-	X	-
MRT 2145 Easy 3B S2 360°	X	-	X	-	-
MRT 2145 Easy T4 S2 360°	X	-	X	-	X
MRT 2145 Easy T4 S2 400°	X	-	-	-	X
MRT 2150 Privilege Plus	X	-	X	-	X
MRT 2260	-	X	-	X	-
MRT 2470 Privilege Plus	X	-	X	-	X
MRT 2545 115	-	X	-	X	-
MRT 2545 Easy 3B S2 360°	X	-	-	-	X
MRT 2545 Easy T4 S2 360°	-	-	X	-	X
MRT 2545 Easy T4 S2 400°	-	-	X	-	-
MRT 2550 Privilege Plus	X	-	X	-	X
MRT 2570	-	X	-	X	-
MRT 2660	-	X	-	X	-
MRT 3050 Privilege Plus	X	-	X	-	X
MRT 3060	-	X	-	X	-
MRT 3255 Privilege Plus	X	-	X	-	-

	PSE 4400 / 365	PSE 4400 / 365 (MRT)	PSE 4400 / 365 D	PSE 4400 / 365 D (MRT)	PSE 4400 / 365 DD
Machines compatibility					
MRT 3570	-	X	-	X	-
MRT 3570 ES	-	X	-	X	-
MRT-X 1440 Easy 400°	X	-	X	-	X
MRT-X 1640 Easy 360°	X	-	X	-	X
MRT-X 1640 Easy 400°	X	-	X	-	X
MRT-X 1645	-	X	-	X	-
MRT-X 1840 Easy 360°	X	-	X	-	X
MRT-X 1840 Easy 400°	X	-	X	-	X
MRT-X 1845	-	X	-	X	-
MRT-X 2145	-	X	-	X	-
MRT-X 2150 Privilege Plus	X	-	X	-	X
MRT-X 2260	-	X	-	X	-
MRT-X 2470 Privilege Plus	X	-	X	-	X
MRT-X 2545	-	X	-	X	-
MRT-X 2545 Easy 360°	X	-	X	-	X
MRT-X 2545 Easy 400°	X	-	X	-	X
MRT-X 2550 Privilege Plus	X	-	X	-	X
MRT-X 2570	-	X	-	X	-
MRT-X 2660	-	X	-	X	-
MRT-X 3050 Privilege Plus	X	-	X	-	X
MRT-X 3060	-	X	-	X	-
MRT-X 3255 Privilege Plus	X	-	X	-	-
MRT-X 3570	-	X	-	X	-
MRT-X 3570 ES	-	X	-	X	-
MT 1135 HA Easy ST5	-	-	X	-	X
MT 1335 HA easy ST5	-	-	X	-	-
MT 1440 A	-	-	X	-	X
MT 1440 HA	-	-	X	-	X
MT 1840 A	-	-	X	-	X
MT 1840 HA	-	-	X	-	X
MT-X 1440 A	-	-	X	-	X
MT-X 1840 A	-	-	X	-	X

MANDATORY MACHINE EQUIPMENT:

	PSE 4400 / 365 DD (MRT)	PSE 4400 / 700 D	PSE 4400 / 700 D (MRT)	PSE 4400 / 1000 D	PSE 4400 / 1000 D (MRT)
Capacity including people (kg)	365	700	700	1000	1000
Number of people	3	3	3	3	3
Overall height (mm)	1312	1312	1312	1312	1312
Width minimum (mm)	2282	2282	2282	2282	2282
Width maximum (mm)	4348	4348	4348	4348	4348
Length (mm)	2261	2261	2261	2261	2261
Depth (mm)	1150	1150	1150	1150	1150
Overall weight (kg)	690	1030	1030	1030	1030
Machine Equipement					
Rotation 1	180	180	180	180	180

Machines compatibility					
Reference number	**-**	**939023**	**-**	**939022**	**-**
Reference number E-RECO	**52719250**	**939020**	**52719251**	**939500**	**52619610**
Reference number E-RECO 2	**-**	**-**	**52719668**	**939242**	**52719669**
MHT 10130	-	-	-	X	-
MHT 10180	-	-	-	X	-
MHT 10230	-	-	-	X	-
MHT-X 10130	-	-	-	X	-
MHT-X 10180	-	-	-	X	-
MHT-X 10230	-	-	-	X	-
MRT 1640 Easy T4 S2 360°	-	X	-	X	-
MRT 1645 75	X	-	X	-	X
MRT 1645 115	X	-	X	-	X
MRT 1840 Easy 3B S2 360°	-	X	-	-	-
MRT 1840 Easy 3B S2 400°	-	X	-	-	-
MRT 1840 Easy T4 S2 360°	-	-	-	X	-
MRT 1840 Easy T4 S2 400°	-	-	-	X	-
MRT 1845 75	X	-	X	-	X
MRT 1845 115	X	-	X	-	X
MRT 2145 115	X	-	X	-	X
MRT 2145 Easy 3B S2 360°	-	X	-	-	-
MRT 2145 Easy T4 S2 360°	-	X	-	X	-
MRT 2145 Easy T4 S2 400°	-	-	-	X	-
MRT 2150 Privilege Plus	-	X	-	X	-
MRT 2260	X	-	X	-	X
MRT 2470 Privilege Plus	-	-	-	X	-
MRT 2545 115	X	-	X	-	X
MRT 2545 Easy T4 S2 360°	-	X	-	X	-
MRT 2545 Easy T4 S2 400°	-	X	-	X	-
MRT 2550 Privilege Plus	-	-	-	X	-
MRT 2570	X	-	X	-	X
MRT 2660	X	-	X	-	X
MRT 3050 Privilege Plus	-	-	-	X	-
MRT 3060	X	-	X	-	X
MRT 3255 Privilege Plus	-	-	-	X	-

	PSE 4400 / 365 DD (MRT)	PSE 4400 / 700 D	PSE 4400 / 700 D (MRT)	PSE 4400 / 1000 D	PSE 4400 / 1000 D (MRT)
Machines compatibility					
MRT 3570	X	-	X	-	X
MRT 3570 ES	X	-	X	-	X
MRT-X 1440 Easy 400°	-	X	-	X	-
MRT-X 1640 Easy 360°	-	X	-	X	-
MRT-X 1640 Easy 400°	-	X	-	X	-
MRT-X 1645	X	-	X	-	X
MRT-X 1840 Easy 360°	-	X	-	X	-
MRT-X 1840 Easy 400°	-	X	-	X	-
MRT-X 1845	X	-	X	-	X
MRT-X 2145	X	-	X	-	X
MRT-X 2150 Privilege Plus	-	X	-	X	-
MRT-X 2260	X	-	X	-	X
MRT-X 2470 Privilege Plus	-	-	-	X	-
MRT-X 2545	X	-	X	-	X
MRT-X 2545 Easy 360°	-	X	-	X	-
MRT-X 2545 Easy 400°	-	X	-	X	-
MRT-X 2550 Privilege Plus	-	-	-	X	-
MRT-X 2570	X	-	X	-	X
MRT-X 2660	X	-	X	-	X
MRT-X 3050 Privilege Plus	-	-	-	X	-
MRT-X 3060	X	-	X	-	X
MRT-X 3255 Privilege Plus	-	-	-	X	-
MRT-X 3570	X	-	X	-	X
MRT-X 3570 ES	X	-	X	-	X
MT 1135 HA Easy ST5	-	X	-	X	-
MT 1335 HA easy ST5	-	X	-	X	-
MT 1440 A	-	X	-	X	-
MT 1440 HA	-	X	-	X	-
MT 1840 A	-	X	-	X	-
MT 1840 HA	-	X	-	X	-
MT-X 1440 A	-	X	-	X	-
MT-X 1840 A	-	X	-	X	-

MANDATORY MACHINE EQUIPMENT:

FIXED SLEWING ROOFER PLATFORM

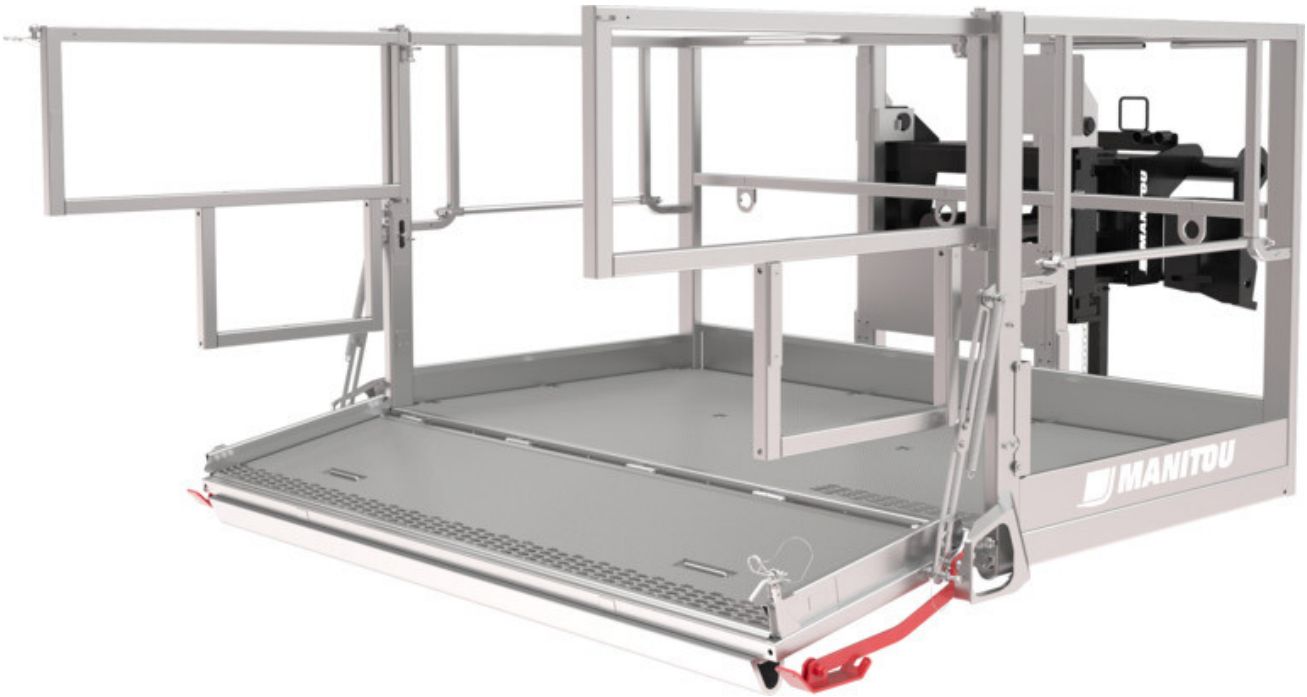

- Total capacity 1000 kg, of which 400 kg can be applied of the overhanging part.
- Slewing platform +/- 90° on both sides.
- Legally approved for 3 persons.
- Presence sensors forbidding any movement after door opening.
- Overload sensor.
- Physical sensors allowing door opening only if roof contact.
- Cutting edge platforms designed for roof work.
- Secured platform.
- Non-slip metal flooring.
- Heavy duty and galvanised structure for an improved longevity.
- Platform 2,3x1.2: possibility to load a Euro pallet.

	NC 2.3 x 1.2	PSR 2300 / 1000F 3P
Capacity including people (kg)	1000	1000
Number of people	3	3
Overall height (mm)	1307	1307
Width (mm)	2404	2404
Length (mm)	2430	2430
Depth (mm)	1120	1120
Overall weight (kg)	945	945
Machine Equipement		-
Rotation 1	180	180

Machines compatibility		
Reference number E-RECO	**923323**	**52719261**
MRT 1640 Easy T4 S2 360°	X	-
MRT 1645 75	-	X
MRT 1645 115	-	X
MRT 1840 Easy T4 S2 360°	X	-
MRT 1840 Easy T4 S2 400°	X	-
MRT 1845 75	-	X
MRT 1845 115	-	X
MRT 2145 115	-	X
MRT 2145 Easy 3B S2 360°	X	-
MRT 2145 Easy T4 S2 360°	X	-
MRT 2145 Easy T4 S2 400°	X	-
MRT 2150 Privilege Plus	X	-
MRT 2260	-	X
MRT 2470 Privilege Plus	X	-
MRT 2545 115	-	X
MRT 2545 Easy T4 S2 360°	X	-
MRT 2550 Privilege Plus	X	-
MRT 2570	-	X
MRT 2660	-	X
MRT 3050 Privilege Plus	X	-
MRT 3060	-	X
MRT 3570	-	X
MRT 3570 ES	-	X
MRT-X 1440 Easy 400°	X	-
MRT-X 1645	-	X
MRT-X 1845	-	X
MRT-X 2145	-	X
MRT-X 2150 Privilege Plus	X	-
MRT-X 2260	-	X
MRT-X 2470 Privilege Plus	X	-
MRT-X 2545	-	X
MRT-X 2550 Privilege Plus	X	-
MRT-X 2570	-	X
MRT-X 2660	-	X

	NC 2.3 x 1.2	PSR 2300 / 1000F 3P
Machines compatibility		
MRT-X 3050 Privilege Plus	X	-
MRT-X 3060	-	X
MRT-X 3570	-	X
MRT-X 3570 ES	-	X

MANDATORY MACHINE EQUIPMENT:

PLATFORM

- Capacity 200 kg or 365 kg.
- Slewing platform +/- 90° on both sides or fixed.
- Legally approved for 3 people (platform capacity includes 3 people).
- Overload (365 kg only) and presence sensor.
- Painted platform.
- Non-slip metal floor.
- Fork sleeves: 238 mm x 100 mm.
- Uncompromized safety in people lifting applications.
- Simple and efficient platform.
- Cost efficient solution for people lifting.
- Safety: hand rail all around the platform.
- Access from both sides for higher flexibility.
- Fork sleeves for yard handling.

	NAC 1.2 x 0.8 M	NAC 2M	ORH	PF 1200 / 200 2P	PF 2000 / 365 3P	PS 2000 / 365 3P
Capacity including people (kg)	200	365	365	200	365	365
Number of people	2	3	3	2	3	3
Overall height (mm)	1240	1293	1319	1240	1293	1319
Width (mm)	1391	2190	2190	1390	2000	2190
Length (mm)	1095	1812	2490	1095	1812	2490
Depth (mm)	740	1150	1150	740	1150	1150
Overall weight (kg)	165	393	570	165	393	570
Machine Equipement				-	-	-
Rotation 1	-	-	180	-	-	180

Machines compatibility						
Reference number	**939382**	**788782**	**-**	**-**	**-**	**-**
Reference number E-RECO	**923345**	**921296**	**921304**	**52719244**	**52719245**	**52719246**
Reference number E-RECO 2	**-**	**939240**	**-**	**-**	**52719658**	**-**
MHT 790	-	X	X	-	-	-
MHT 10130	-	X	-	-	-	-
MHT 10180	-	X	-	-	-	-
MHT 10230	-	X	-	-	-	-
MHT-X 790	-	X	X	-	-	-
MHT-X 10130	-	X	-	-	-	-
MHT-X 10180	-	X	-	-	-	-
MHT-X 10230	-	X	-	-	-	-
MRT 1640 Easy T4 S2 360°	-	X	X	-	-	-
MRT 1645 75	-	-	-	-	X	X
MRT 1645 115	-	-	-	-	X	X
MRT 1840 Easy T4 S2 360°	-	X	X	-	-	-
MRT 1840 Easy T4 S2 400°	-	X	X	-	-	-
MRT 1845 75	-	-	-	-	X	X
MRT 1845 115	-	-	-	-	X	X
MRT 2145 115	-	-	-	-	X	X
MRT 2145 Easy T4 S2 360°	-	X	X	-	-	-
MRT 2145 Easy T4 S2 400°	-	X	X	-	-	-
MRT 2150 Privilege Plus	X	X	X	-	-	-
MRT 2260	-	-	-	X	X	X
MRT 2470 Privilege Plus	X	X	X	-	-	-
MRT 2545 115	-	-	-	-	X	X
MRT 2545 Easy T4 S2 360°	-	-	X	-	-	-
MRT 2545 Easy T4 S2 400°	-	X	X	-	-	-
MRT 2550 Privilege Plus	X	X	X	-	-	-
MRT 2570	-	-	-	X	X	X
MRT 2660	-	-	-	X	X	X
MRT 3050 Privilege Plus	X	X	X	-	-	-
MRT 3060	-	-	-	X	X	X
MRT 3255 Privilege Plus	-	X	X	-	-	-
MRT 3570	-	-	-	X	X	X
MRT 3570 ES	-	-	-	X	X	X

	NAC 1.2 x 0.8 M	NAC 2M	ORH	PF 1200 / 200 2P	PF 2000 / 365 3P	PS 2000 / 365 3P
Machines compatibility						
MRT-X 1440 Easy 400°	-	X	X	-	-	-
MRT-X 1640 Easy 360°	-	X	X	-	-	-
MRT-X 1640 Easy 400°	-	X	X	-	-	-
MRT-X 1645	-	-	-	-	X	X
MRT-X 1840 Easy 360°	-	X	X	-	-	-
MRT-X 1840 Easy 400°	-	X	X	-	-	-
MRT-X 1845	-	-	-	-	X	X
MRT-X 2145	-	-	-	-	X	X
MRT-X 2150 Privilege Plus	X	X	X	-	-	-
MRT-X 2260	-	-	-	X	X	X
MRT-X 2470 Privilege Plus	X	X	X	-	-	-
MRT-X 2545	-	-	-	-	X	X
MRT-X 2545 Easy 360°	-	X	X	-	-	-
MRT-X 2545 Easy 400°	-	X	X	-	-	-
MRT-X 2550 Privilege Plus	X	X	X	-	-	-
MRT-X 2570	-	-	-	X	X	X
MRT-X 2660	-	-	-	X	X	X
MRT-X 3050 Privilege Plus	X	X	X	-	-	-
MRT-X 3060	-	-	-	X	X	X
MRT-X 3255 Privilege Plus	-	X	X	-	-	-
MRT-X 3570	-	-	-	X	X	X
MRT-X 3570 ES	-	-	-	X	X	X
MT 625 HA	X	X	-	-	-	-
MT 1135 HA Easy ST5	-	X	-	-	-	-
MT 1335 HA easy ST5	-	X	-	-	-	-
MT 1440 A	-	X	-	-	-	-
MT 1440 HA	-	X	-	-	-	-
MT 1840 A	-	X	-	-	-	-
MT 1840 HA	-	X	-	-	-	-
MT-X 1440 A	-	X	-	-	-	-
MT-X 1840 A	-	X	-	-	-	-

MANDATORY MACHINE EQUIPMENT:

PLATFORM WITH DISMOUNTABLE FOPS ROOF

- Platform fitted with a protection roof designed according to FOPS-1 standard.
- Legally approved for 3 persons.
- Dismountable roof.
- 90°/90° rotation.
- 3m wide basket, non extendable.
- Fork sleeves: 238 mm x 100 mm.
- Access: sliding bar.
- Full safety in people lifting.
- Solution designed for tunneling/mining applications where operator protection is required.
- Dismountable roof the platform can be used for standard applications when protection is not required.
- Fork sleeves for yard handing.

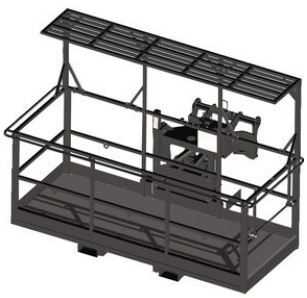

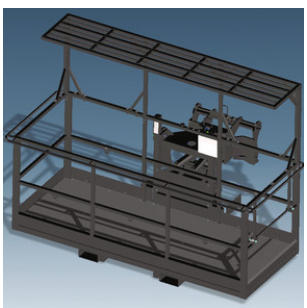

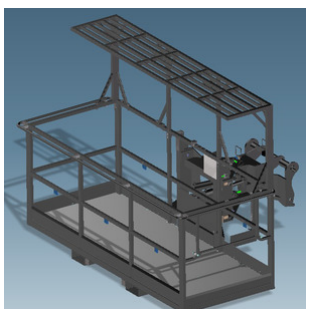

	PST 3000 / 1000	RF/P 3x1.2m 1000kg
Capacity (kg)	1000	1000
Capacity including people (kg)	1000	1000
Number of people	3	3
Overall height (mm)	2140	2140
Width (mm)	3190	3190
Length (mm)	2375	2375
Overall weight (kg)	1100	1100
Machine Equipement	-	
Rotation 1	90	90

Machines compatibility		
Reference number E-RECO	**52719263**	**921357**
MRT 1645 75	X	-
MRT 1645 115	X	-
MRT 1845 75	X	-
MRT 1845 115	X	-
MRT 2145 115	X	-
MRT 2145 Easy T4 S2 360°	-	X
MRT 2145 Easy T4 S2 400°	-	X
MRT 2150 Privilege Plus	-	X
MRT 2260	X	-
MRT 2470 Privilege Plus	-	X
MRT 2545 115	X	-
MRT 2545 Easy T4 S2 360°	-	X
MRT 2545 Easy T4 S2 400°	-	X
MRT 2550 Privilege Plus	-	X
MRT 2570	X	-
MRT 2660	X	-
MRT 3050 Privilege Plus	-	X
MRT 3060	X	-
MRT 3570	X	-
MRT 3570 ES	X	-
MRT-X 1645	X	-
MRT-X 1845	X	-
MRT-X 2145	X	-
MRT-X 2150 Privilege Plus	-	X
MRT-X 2260	X	-
MRT-X 2470 Privilege Plus	-	X
MRT-X 2545	X	-
MRT-X 2545 Easy 360°	-	X
MRT-X 2545 Easy 400°	-	X
MRT-X 2550 Privilege Plus	-	X
MRT-X 2570	X	-
MRT-X 2660	X	-
MRT-X 3050 Privilege Plus	-	X
MRT-X 3060	X	-

	PST 3000 / 1000	RF/P 3x1.2m 1000kg
Machines compatibility		
MRT-X 3570	X	-
MRT-X 3570 ES	X	-

MANDATORY MACHINE EQUIPMENT:

PLATFORM WITH WINCH

- 450 kg or 600 kg for platform + 450 kg or 300 kg for winch = 900 kg capacity in total.
- 2 different winch capacity / platform capacity couples.
- Hydraulic winch fitted on the rotating (manual) liftable (hydraulic) telescopic (manual) jib.
- Slewing platform +/- 90° on both sides.
- Legally approved for 3 persons.
- Overload sensor on the platform + overload sensor on the winch.
- Fork sleeves for yard handling.
- Performance in cladding & maintenance applications.
- Uncompromized safety + unbeaten efficiency.
- Heavy duty and galvanized structure for an improved longevity.
- Non-slip metal floor.
- Expandable sides are independent.
- Manual jib + winch positioning.
- Hydraulic jib + winch lifting, prevents from the pulling the load in the basket.

	NAC ARG 450kg / 450kg	NAC ARG 600kg / 300kg	PSE 4000 / 450D + W450 / 35M	PSE 4000 / 600D + W300 / 41M
Capacity (kg)	450	300	450	300
Capacity including people (kg)	450	600	450	600
Number of people	3	3	3	3
Overall height (mm)	2708	2708	2708	2708
Width minimum (mm)	2250	2250	2250	2250
Width maximum (mm)	3988	3988	3988	3988
Length (mm)	2206	2206	2206	2206
Overall weight (kg)	1330	1350	1330	1330
Cable length (mm)	30000	30000	35000	41000
Cable loop	Direct	Direct	Direct	Direct
Machine Equipement	+	+	-	-
Hook Speed (m/mn)	80	80	80	80
Rotation 1	180	180	180	180

Machines compatibility				
Reference number E-RECO	**914440**	**923336**	**52719258**	**52719257**
Reference number E-RECO 2	**939246**	**939245**	**-**	**-**
Reference E-RECO (non-standard)	**-**	**939155**	**-**	**-**
MHT 10130	X	X	-	-
MHT 10180	X	X	-	-
MHT 10230	X	X	-	-
MHT-X 10130	X	X	-	-
MHT-X 10180	X	X	-	-
MHT-X 10230	X	X	-	-
MRT 1640 Easy T4 S2 400°	-	X	-	-
MRT 1645 75	-	-	X	X
MRT 1645 115	-	-	X	X
MRT 1840 Easy T4 S2 360°	-	X	-	-
MRT 1840 Easy T4 S2 400°	-	X	-	-
MRT 1845 75	-	-	X	X
MRT 1845 115	-	-	X	X
MRT 2145 115	-	-	X	X
MRT 2145 Easy T4 S1 400°	-	X	-	-
MRT 2145 Easy T4 S2 400°	-	X	-	-
MRT 2150 Privilege Plus	X	X	-	-
MRT 2260	-	-	X	X
MRT 2470 Privilege Plus	X	X	-	-
MRT 2545 115	-	-	X	X
MRT 2545 Easy T4 S2 360°	-	X	-	-
MRT 2545 Easy T4 S2 400°	-	X	-	-
MRT 2550 Privilege Plus	X	X	-	-
MRT 2570	-	-	X	X
MRT 2660	-	-	X	X
MRT 3050 Privilege Plus	X	X	-	-
MRT 3060	-	-	X	X
MRT 3255 Privilege Plus	X	X	-	-

	NAC ARG 450kg / 450kg	NAC ARG 600kg / 300kg	PSE 4000 / 450D + W450 / 35M	PSE 4000 / 600D + W300 / 41M
Machines compatibility				
MRT 3570	-	-	X	X
MRT 3570 ES	-	-	X	X
MRT-X 1440 Easy 400°	-	X	-	-
MRT-X 1640 Easy 360°	-	X	-	-
MRT-X 1640 Easy 400°	-	X	-	-
MRT-X 1645	-	-	X	X
MRT-X 1840 Easy 360°	-	X	-	-
MRT-X 1840 Easy 400°	-	X	-	-
MRT-X 1845	-	-	X	X
MRT-X 2145	-	-	X	X
MRT-X 2150 Privilege Plus	X	X	-	-
MRT-X 2260	-	-	X	X
MRT-X 2470 Privilege Plus	X	X	-	-
MRT-X 2545	-	-	X	X
MRT-X 2545 Easy 360°	-	X	-	-
MRT-X 2545 Easy 400°	-	X	-	-
MRT-X 2550 Privilege Plus	X	X	-	-
MRT-X 2570	-	-	X	X
MRT-X 2660	-	-	X	X
MRT-X 3050 Privilege Plus	X	X	-	-
MRT-X 3060	-	-	X	X
MRT-X 3255 Privilege Plus	X	X	-	-
MRT-X 3570	-	-	X	X
MRT-X 3570 ES	-	-	X	X

MANDATORY MACHINE EQUIPMENT: +

RAISED EXTENSIBLE PLATFORM

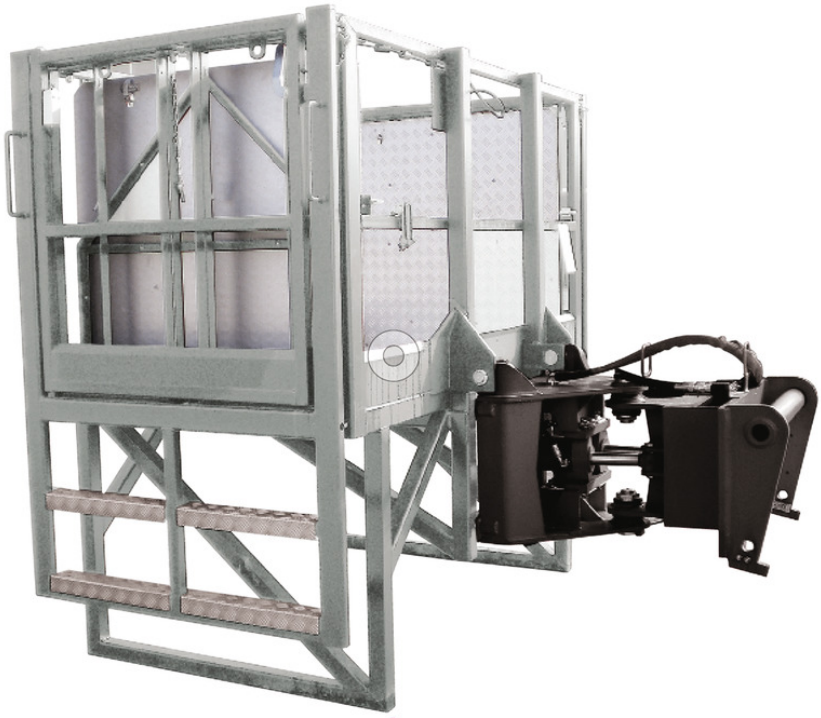

- 55 cm raised platform for under roof applications
- 90°/90° slewing
- Extendable: 2,25-4 m wide
-
- Especially interesting for all second-fix applications (air conditioning, lights etc.)
-
- Capacity 365 kg including 3 people.
- Access: dedicated ladder + door with opening sensor.
- Fork sleeves: 238 mm x 100 mm.
- Ideal platform to work under roof or framework: prevent the machine's boom from hitting the structure.
- Recommended for second fix: air conditioning/ light/ wiring installation etc.

	PSE 4000 / 365D R	Raised platform 2.25-4m
Capacity (kg)	365	365
Capacity including people (kg)	365	365
Number of people	3	3
Overall height (mm)	2078	2078
Width (mm)	4000	4000
Width minimum (mm)	2252	2252
Width maximum (mm)	4002	4002
Length (mm)	2228	2228
Depth (mm)	1120	1120
Overall weight (kg)	1100	1100
Machine Equipement	-	
Rotation 1	90	90

Machines compatibility		
Reference number E-RECO	52719264	923343
MRT 1440 Easy T4 S1 400°	-	X
MRT 1640 Easy T4 S2 360°	-	X
MRT 1645 75	X	-
MRT 1645 115	X	-
MRT 1840 Easy T4 S1 400°	-	X
MRT 1845 75	X	-
MRT 1845 115	X	-
MRT 2145 115	X	-
MRT 2145 Easy T4 S2 360°	-	X
MRT 2145 Easy T4 S2 400°	-	X
MRT 2150 Privilege Plus	-	X
MRT 2260	X	-
MRT 2470 Privilege Plus	-	X
MRT 2545 115	X	-
MRT 2545 Easy 3B S2 400°	-	X
MRT 2545 Easy T4 S2 360°	-	X
MRT 2550 Privilege Plus	-	X
MRT 2570	X	-
MRT 2660	X	-
MRT 3050 Privilege Plus	-	X
MRT 3060	X	-
MRT 3255 Privilege Plus	-	X
MRT 3570	X	-
MRT 3570 ES	X	-
MRT-X 1440 Easy 400°	-	X
MRT-X 1645	X	-
MRT-X 1845	X	-
MRT-X 2145	X	-
MRT-X 2150 Privilege Plus	-	X
MRT-X 2260	X	-
MRT-X 2470 Privilege Plus	-	X

	PSE 4000 / 365D R	Raised platform 2.25-4m
Machines compatibility		
MRT-X 2545	X	-
MRT-X 2550 Privilege Plus	-	X
MRT-X 2570	X	-
MRT-X 2660	X	-
MRT-X 3050 Privilege Plus	-	X
MRT-X 3060	X	-
MRT-X 3255 Privilege Plus	-	X
MRT-X 3570	X	-
MRT-X 3570 ES	X	-

MANDATORY MACHINE EQUIPMENT:

ROOFER PLATFORM

- Capacity from 365 to 1000 kg.
- Slewing platform +/- 90° on both sides.
-
- Safe: front opening only when a direct contact is made with the roof + can be moved only if the front part is closed.
-
- Legally approved for 3 persons
- Presence sensor forbidding any movement after door opening.
- Overload sensor.
- Physical sensor allowing door opening only if roof contact.
- Cutting edge platforms designed for roof work.
- Secured platform.
- Non-slip metal flooring.
- Heavy duty and galvanised structure for an improved longevity.
- Platform NC: large 3,5 m working width.
- Roomy platform: can lift a pallet (Euro) even when folded.

	NC 365	NC 1000	PSR 2400 / 365 3P	PSR 2400 / 1000 3P
Capacity including people (kg)	365	1000	365	1000
Number of people	3	3	3	3
Overall height (mm)	1600	1600	1600	1600
Width minimum (mm)	2420	2420	2420	2420
Width maximum (mm)	3682	3682	3682	3682
Length (mm)	2915	2915	2915	2915
Depth (mm)	1260	-	1260	-
Overall weight (kg)	920	920	920	920
Machine Equipement				-
Rotation 1	180	180	180	180

Machines compatibility				
Reference number	**788789**	**788791**	**-**	**-**
Reference number E-RECO	**923309**	**921294**	**52719259**	**52719260**
MRT 1640 Easy 3B S2 360°	X	-	-	-
MRT 1640 Easy T4 S2 400°	-	X	-	-
MRT 1645 75	-	-	X	X
MRT 1645 115	-	-	X	X
MRT 1840 Easy T4 S2 360°	X	X	-	-
MRT 1840 Easy T4 S2 400°	X	X	-	-
MRT 1845 75	-	-	X	X
MRT 1845 115	-	-	X	X
MRT 2145 115	-	-	X	X
MRT 2145 Easy T4 S2 360°	-	X	-	-
MRT 2145 Easy T4 S2 400°	X	X	-	-
MRT 2150 Privilege Plus	X	X	-	-
MRT 2260	-	-	X	X
MRT 2470 Privilege Plus	X	X	-	-
MRT 2545 115	-	-	X	X
MRT 2545 Easy 3B S2 360°	X	-	-	-
MRT 2545 Easy T4 S2 360°	X	X	-	-
MRT 2545 Easy T4 S2 400°	X	X	-	-
MRT 2550 Privilege Plus	X	X	-	-
MRT 2570	-	-	X	X
MRT 2660	-	-	X	X
MRT 3050 Privilege Plus	X	X	-	-
MRT 3060	-	-	X	X
MRT 3255 Privilege Plus	X	-	-	-
MRT 3570	-	-	X	X
MRT 3570 ES	-	-	X	X
MRT-X 1440 Easy 400°	X	X	-	-
MRT-X 1640 Easy 360°	X	X	-	-
MRT-X 1640 Easy 400°	X	X	-	-
MRT-X 1645	-	-	X	X
MRT-X 1840 Easy 360°	X	X	-	-
MRT-X 1840 Easy 400°	X	X	-	-

	NC 365	NC 1000	PSR 2400 / 365 3P	PSR 2400 / 1000 3P
Machines compatibility				
MRT-X 1845	-	-	X	X
MRT-X 2145	-	-	X	X
MRT-X 2150 Privilege Plus	X	X	-	-
MRT-X 2260	-	-	X	X
MRT-X 2470 Privilege Plus	X	X	-	-
MRT-X 2545	-	-	X	X
MRT-X 2545 Easy 360°	X	X	-	-
MRT-X 2545 Easy 400°	X	X	-	-
MRT-X 2550 Privilege Plus	X	X	-	-
MRT-X 2570	-	-	X	X
MRT-X 2660	-	-	X	X
MRT-X 3050 Privilege Plus	X	X	-	-
MRT-X 3060	-	-	X	X
MRT-X 3255 Privilege Plus	X	-	-	-
MRT-X 3570	-	-	X	X
MRT-X 3570 ES	-	-	X	X
MT 1440 A	X	X	-	-
MT 1440 HA	X	X	-	-
MT 1840 A	X	X	-	-
MT 1840 HA	X	X	-	-
MT-X 1440 A	X	X	-	-
MT-X 1840 A	X	X	-	-

MANDATORY MACHINE EQUIPMENT:

SYSTEM 3D

- Telescopic vertical arm + negative.
- 170° boom rotation on both sides of the basket.
- Positive and negative work area for applications .
- Legally approved for 2 persons.
- Boom position sensor.
- Locking pin presence sensor.
- Maximum safety in people.
- Pendular design and structure allowing underbridge operations.
- Non-slip metal flooring.

	P 3D 1000 / 200 L6700	P 3D 1000 / 200 L7500	System 3D	System 3D (2)
Capacity including people (kg)	200	200	200	200
Number of people	2	2	2	2
Working reach max. (mm)	8170	8540	8170	8540
Overall height (mm)	2898	2898	2898	2898
Width (mm)	-	1676	1676	1676
Length (mm)	7670	7670	7670	7670
Depth (mm)	320	620	620	620
Overall weight (kg)	1170	1100	1100	1100
Machine Equipement	-	-	+	-
Working height positive (mm)	9560	11100	9560	11100
Working outreach (mm)	-	8540	8170	8540
Rotation 1	340	340	340	340

Machines compatibility				
Reference number E-RECO	**52719363**	**52719270**	**921311**	**921312**
Reference number E-RECO 2	**52719674**	**52719672**	**-**	**53027160**
MRT 1440 Easy T4 S1 400°	-	-	X	-
MRT 1440 Easy T4 S2 400°	-	-	X	-
MRT 1640 Easy T4 S2 360°	-	-	-	X
MRT 1640 Easy T4 S2 400°	-	-	-	X
MRT 1645 75	-	X	-	-
MRT 1645 115	-	X	-	-
MRT 1840 Easy T4 S2 360°	-	-	X	-
MRT 1840 Easy T4 S2 400°	-	-	X	-
MRT 1845 75	X	-	-	-
MRT 1845 115	X	-	-	-
MRT 2145 115	-	X	-	-
MRT 2145 Easy T4 S2 360°	-	-	X	-
MRT 2145 Easy T4 S2 400°	-	-	X	-
MRT 2150 Privilege Plus	-	-	-	X
MRT 2260	-	X	-	-
MRT 2470 Privilege Plus	-	-	-	X
MRT 2545 115	-	X	-	-
MRT 2545 Easy T4 S2 360°	-	-	X	-
MRT 2545 Easy T4 S2 400°	-	-	X	-
MRT 2550 Privilege Plus	-	-	-	X
MRT 2570	-	X	-	-
MRT 2660	-	X	-	-
MRT 3050 Privilege Plus	-	-	-	X
MRT 3060	-	X	-	-
MRT 3255 Privilege Plus	-	-	-	X
MRT 3570	-	X	-	-
MRT 3570 ES	-	X	-	-
MRT-X 1440 Easy 400°	-	-	X	-
MRT-X 1645	-	X	-	-
MRT-X 1840 Easy 360°	-	-	X	-

	P 3D 1000 / 200 L6700	P 3D 1000 / 200 L7500	System 3D	System 3D (2)
Machines compatibility				
MRT-X 1840 Easy 400°	-	-	X	-
MRT-X 1845	X	-	-	-
MRT-X 2145	-	X	-	-
MRT-X 2145 Easy 360°	-	-	X	-
MRT-X 2145 Easy 400°	-	-	X	-
MRT-X 2150 Privilege Plus	-	-	-	X
MRT-X 2260	-	X	-	-
MRT-X 2470 Privilege Plus	-	-	-	X
MRT-X 2545	-	X	-	-
MRT-X 2545 Easy 360°	-	-	X	-
MRT-X 2545 Easy 400°	-	-	X	-
MRT-X 2550 Privilege Plus	-	-	-	X
MRT-X 2570	-	X	-	-
MRT-X 2660	-	X	-	-
MRT-X 3050 Privilege Plus	-	-	-	X
MRT-X 3060	-	X	-	-
MRT-X 3255 Privilege Plus	-	-	-	X
MRT-X 3570	-	X	-	-
MRT-X 3570 ES	-	X	-	-

MANDATORY MACHINE EQUIPMENT:

SKIP

Range

252 Concrete Skip

255 Crane Skip

MANITOU GROUP | ATTACHMENTS

CONCRETE SKIP

- 500 L capacity.
- Carriage mounted (front position) or fork mounted (front and side unloading).
- Fork sleeves: 170 x 75mm.
- Safety: attachment equipped with a fork lock system.
- Well-protected components.
- BBHG 500 MRT: equipped with a counterbalance valve.
- Skip adapted to the needs of construction professionals.
- Compact attachment allowing work in window openings.
- Multi-purpose, for concrete and mortar.
- Optional: hydraulic opening for a controlled unloading ("H").
- Optional: flexible tube ("G") (1m, ø200 mm) for excellent accuracy.

	BB 500	BB 500 MRT	BBG 500	BBH 500	BBHG 500	BBHG 500 MRT
Capacity (kg)	1200	1200	1200	1200	1200	1200
Heaped Capacity (l)	500	500	500	500	500	500
Overall height (mm)	776	776	776	776	776	776
Width (mm)	1216	1216	1220	1110	1110	1110
Length (mm)	1466	1466	1466	1466	1466	1466
Overall weight (kg)	191	191	201	200	210	211
Machine Equipement	X	X	X			
Opening	Manual	Manual	Manual	Hydraulic	Hydraulic	Hydraulic
Flexible tube	No	No	Yes	No	Yes	Yes

Machines compatibility						
Reference number	**52000637**	**-**	**52000639**	**52000638**	**52000640**	**-**
Reference number E-RECO	**-**	**52000642**	**-**	**-**	**-**	**52000643**
MRT 1640 Easy T4 S2 360°	-	X	-	-	-	X
MRT 1645 75	-	X	-	-	-	X
MRT 1645 115	-	X	-	-	-	X
MRT 1840 Easy T4 S2 360°	-	X	-	-	-	X
MRT 1840 Easy T4 S2 400°	-	X	-	-	-	X
MRT 1845 75	-	X	-	-	-	X
MRT 1845 115	-	X	-	-	-	X
MRT 2145 115	-	X	-	-	-	X
MRT 2145 Easy T4 S2 360°	-	X	-	-	-	X
MRT 2145 Easy T4 S2 400°	-	X	-	-	-	X
MRT 2150 Privilege Plus	-	X	-	-	-	X
MRT 2260	-	X	-	-	-	X
MRT 2470 Privilege Plus	-	X	-	-	-	X
MRT 2545 115	-	X	-	-	-	X
MRT 2545 Easy T4 S2 360°	-	X	-	-	-	X
MRT 2545 Easy T4 S2 400°	-	X	-	-	-	X
MRT 2550 Privilege Plus	-	X	-	-	-	X
MRT 2570	-	X	-	-	-	X
MRT 2660	-	X	-	-	-	X
MRT 3050 Privilege Plus	-	X	-	-	-	X
MRT 3060	-	X	-	-	-	X
MRT 3570	-	X	-	-	-	X
MRT 3570 ES	-	X	-	-	-	X
MRT-X 1440 Easy 400°	-	X	-	-	-	X
MRT-X 1640 Easy 360°	-	X	-	-	-	X
MRT-X 1640 Easy 400°	-	X	-	-	-	X
MRT-X 1645	-	X	-	-	-	X
MRT-X 1840 Easy 360°	-	X	-	-	-	X
MRT-X 1840 Easy 400°	-	X	-	-	-	X
MRT-X 1845	-	X	-	-	-	X
MRT-X 2145	-	X	-	-	-	X
MRT-X 2150 Privilege Plus	-	X	-	-	-	X
MRT-X 2260	-	X	-	-	-	X

	BB 500	BB 500 MRT	BBG 500	BBH 500	BBHG 500	BBHG 500 MRT
Machines compatibility						
MRT-X 2470 Privilege Plus	-	X	-	-	-	X
MRT-X 2545	-	X	-	-	-	X
MRT-X 2545 Easy 360°	-	X	-	-	-	X
MRT-X 2545 Easy 400°	-	X	-	-	-	X
MRT-X 2550 Privilege Plus	-	X	-	-	-	X
MRT-X 2570	-	X	-	-	-	X
MRT-X 2660	-	X	-	-	-	X
MRT-X 3050 Privilege Plus	-	X	-	-	-	X
MRT-X 3060	-	X	-	-	-	X
MRT-X 3570	-	X	-	-	-	X
MRT-X 3570 ES	-	X	-	-	-	X
MT 420 H	X	-	-	-	-	-
MT 625 HA	X	-	X	X	X	-
MT 733 Easy	X	-	X	X	X	-
MT 933 Easy	X	-	-	-	X	-
MT 1033 easy	X	-	X	X	X	-
MT 1135	X	-	X	X	X	-
MT 1135 H easy ST5	X	-	X	X	X	-
MT 1335	X	-	X	X	X	-
MT 1440	X	-	X	X	X	-
MT 1440 A	X	-	X	X	X	-
MT 1440 HA	X	-	X	X	X	-
MT 1840	X	-	X	X	X	-
MT 1840 A	X	-	X	X	X	-
MT 1840 HA	X	-	X	X	X	-
MT-X 625 H	X	-	X	X	X	-
MT-X 1440	X	-	X	X	X	-
MT-X 1440 A	X	-	X	X	X	-
MT-X 1840	X	-	X	X	X	-
MT-X 1840 A	X	-	X	X	X	-

MANDATORY MACHINE EQUIPMENT:

CRANE SKIP

- Fork locking system.
- 3 way forks entry (fork sleeves 170 x 75 mm).
- Hydraulic opening available on the 600 H version.
- Protected hydraulic components.
- Discharged width: 540 mm.
- GL 600 H for MRT: equipped with a counterbalance valve.
- Versatile: hitch on forks or suspended.
- Attachment's center of gravity designed for a great stability.
- Optimized shape for efficient distribution.
- Reviewed design maximizing operator safety & component protection.
- Optional: hydraulic opening ("H") for an accurate and controlled distribution.

	GL 400	GL 600	GL 600 H	GL 600 H MRT
Capacity (kg)	960	1440	1440	-
Heaped Capacity (l)	400	600	600	-
Overall height (mm)	1177	1197	1197	-
Width (mm)	1139	1361	1326	1326
Length (mm)	856	995	995	-
Overall weight (kg)	185	227	241	241
Machine Equipement	×	×		
Opening	Manual	Manual	Hydraulic	Hydraulic
Flexible tube	No	No	No	No

Machines compatibility				
Reference number	**52000527**	**52000528**	**52000529**	**52553617**
Reference number E-RECO	**-**	**-**	**52553617**	**-**
MRT 1640 Easy T4 S2 360°	-	-	-	X
MRT 1645 75	-	-	X	-
MRT 1645 115	-	-	X	-
MRT 1840 Easy T4 S2 360°	-	-	-	X
MRT 1840 Easy T4 S2 400°	-	-	-	X
MRT 1845 75	-	-	X	-
MRT 1845 115	-	-	X	-
MRT 2145 115	-	-	X	-
MRT 2145 Easy T4 S2 360°	-	-	-	X
MRT 2145 Easy T4 S2 400°	-	-	-	X
MRT 2150 Privilege Plus	-	-	-	X
MRT 2260	-	-	X	-
MRT 2470 Privilege Plus	-	-	-	X
MRT 2545 115	-	-	X	-
MRT 2545 Easy T4 S2 360°	-	-	-	X
MRT 2545 Easy T4 S2 400°	-	-	-	X
MRT 2550 Privilege Plus	-	-	-	X
MRT 2570	-	-	X	-
MRT 2660	-	-	X	-
MRT 3050 Privilege Plus	-	-	-	X
MRT 3060	-	-	X	-
MRT 3570	-	-	X	-
MRT 3570 ES	-	-	X	-
MRT-X 1440 Easy 400°	-	-	-	X
MRT-X 1640 Easy 360°	-	-	-	X
MRT-X 1640 Easy 400°	-	-	-	X
MRT-X 1645	-	-	X	-
MRT-X 1840 Easy 360°	-	-	-	X
MRT-X 1840 Easy 400°	-	-	-	X
MRT-X 1845	-	-	X	-
MRT-X 2145	-	-	X	-
MRT-X 2145 Easy 360°	-	-	-	X
MRT-X 2145 Easy 400°	-	-	-	X

	GL 400	GL 600	GL 600 H	GL 600 H MRT
Machines compatibility				
MRT-X 2150 Privilege Plus	-	-	-	X
MRT-X 2260	-	-	X	-
MRT-X 2470 Privilege Plus	-	-	-	X
MRT-X 2545	-	-	X	-
MRT-X 2545 Easy 360°	-	-	-	X
MRT-X 2545 Easy 400°	-	-	-	X
MRT-X 2550 Privilege Plus	-	-	-	X
MRT-X 2570	-	-	X	-
MRT-X 2660	-	-	X	-
MRT-X 3050 Privilege Plus	-	-	-	X
MRT-X 3060	-	-	X	-
MRT-X 3570	-	-	X	-
MRT-X 3570 ES	-	-	X	-
MT 625 HA	X	X	X	-
MT 733 Easy	X	X	X	-
MT 933 Easy	-	X	X	-
MT 1033 easy	X	X	X	-
MT 1440	X	X	X	-
MT 1440 A	X	X	X	-
MT 1440 HA	X	X	X	-
MT 1840	X	X	X	-
MT 1840 A	X	X	X	-
MT 1840 HA	X	X	X	-
MT-X 625 H	X	X	X	-
MT-X 1440	X	X	X	-
MT-X 1440 A	X	X	X	-
MT-X 1840	X	X	X	-
MT-X 1840 A	X	X	X	-

MANDATORY MACHINE EQUIPMENT:

SWEEPER & CLEANER

Range

259 Angle Broom (Compact machines)
261 Broom Bucket (Compact machines)
264 Farm Yard Scraper (Compact machines)
266 High pressure cleaner
268 Pickup Sweeper
270 Sweeper 2 in 1

ANGLE BROOM (COMPACT MACHINES)

- Sweeps and picks-up in one operation.
- Strong construction with well-protected components. Polypropylene broom sections
- Based on a bucket: cutting edge can be used to scrap packed material.

	SCA 1330	SCA 1530	SCA 1680	SCA 1750	SCA 1850	SCA 1900	SCA 2080 (a)	SCA 2080 (b)
Overall height (mm)	684	684	684	684	684	684	684	684
Width (mm)	1448	1753	1908	1753	2078	1908	2078	2078
Depth (mm)	1331	1331	1331	1331	1331	1331	1331	1331
Overall weight (kg)	360	400	410	390	420	400	410	410

Machines compatibility								
All-Tach® Narrow	**N004039**	**N004040**	**-**	**-**	**-**	**-**	**-**	**-**
All-Tach®	**-**	**-**	**N004042**	**N51502366**	**N004043**	**N51502366**	**N51502370**	**N51502496**
4 point Carriage	**N51502376**	**N51502377**	**N51502378**	**-**	**N51502379**	**-**	**-**	**-**
Euro Carriage	**N51502380**	**N51502381**	**N51502382**	**-**	**N51502383**	**-**	**-**	**-**
1350 R NXT2	-	-	-	X	-	X	-	-
1350 RT	-	-	-	X	-	X	-	-
1500 R NXT2	-	-	-	-	-	X	-	-
1650 R	-	-	-	-	-	X	-	-
1900 R	-	-	-	-	-	-	-	X
2200 R	-	-	-	-	-	-	-	X
2600 R	-	-	-	-	-	-	-	X
2700 V NXT:2	-	-	-	-	-	-	X	-
AL140	X	X	-	-	-	-	-	-
AL340	X	X	-	-	-	-	-	-
AL440	-	X	X	-	-	-	-	-
AL550	-	-	X	-	X	-	-	-
MLA 1-25 H	X	X	-	-	-	-	-	-
MLA 3-35 H	X	X	-	-	-	-	-	-
MLA 4-50 H	-	X	X	-	-	-	-	-
MLA 5-60 H-Z	-	X	X	-	X	-	-	-

BROOM BUCKET (COMPACT MACHINES)

- Strong construction with well-protected components : polypropylene broom sections
- Sweeps and picks-up in one operation.
- Based on a bucket: cutting edge can be used to scrap packed material.

	SCB 1120 (a)	SCB 1120 (b)	SCB 1370	SCB 1380	SCB 1525 (a)	SCB 1525 (b)
Overall height (mm)	652	652	652	652	652	652
Width (mm)	1376	1376	1631	1631	1776	1786
Depth (mm)	1148	1198	1222	1222	1222	1222
Overall weight (kg)	220	235	310	310	346	346
Working width - angled (mm)	1120	1120	1370	1380	1525	1525

Machines compatibility						
All-Tach® Narrow	**N004035**	**-**	**-**	**N004037**	**-**	**-**
All-Tach®	**-**	**N726029**	**N736038**	**-**	**N004038**	**N736039**
850 R	-	X	-	-	-	-
1050 R	-	-	X	-	-	X
1350 R NXT2	-	-	X	-	-	X
1350 RT	-	-	X	-	X	X
AL140	X	X	-	-	-	-
AL340	-	-	-	X	-	-
AL440	-	-	-	-	X	-
MLA 1-25 H	X	-	-	-	-	-
MLA 3-35 H	-	-	-	X	-	-
MLA 4-50 H	-	-	-	-	X	X

	SCB 1680 (a)	SCB 1680 (b)	SCB 1850 (a)	SCB 1850 (b)	SCB 2080	SCB 2140
Overall height (mm)	690	690	690	690	690	690
Width (mm)	1933	1933	2100	2103	3053	2393
Depth (mm)	1308	1308	1313	1308	1308	1308
Overall weight (kg)	430	430	460	460	525	610
Working width - angled (mm)	1680	1680	1850	1850	2080	2140

Machines compatibility						
All-Tach® Narrow	-	-	-	-	-	-
All-Tach®	**N747032**	**N51502049**	**N757045**	**N51502050**	**N700266**	**N51502051**
1500 R NXT2	X	-	-	-	-	-
1650 R	X	-	-	-	-	-
1750 RT NXT:3	-	X	-	X	-	-
1900 R	X	-	-	-	-	-
2100 RT NXT:3	-	-	-	X	-	X
2200 R	-	-	X	-	-	-
2600 R	-	-	X	-	X	-
2700 V NXT:2	-	-	X	-	X	-
3300 V NXT:2	-	-	-	-	X	-
4200 V	-	-	X	-	X	-

FARM YARD SCRAPER (COMPACT MACHINES)

- Bottom fitted with a rubber protection.

- Farm yard cleaning made easy.
- Very simple and efficient attachment.

	BLSS 1800 (a)	BLSS 1890 (a)	BLSS 1890 (b)
Overall height (mm)	611	611	611
Width (mm)	1800	1890	1890
Depth (mm)	900	900	900
Overall weight (kg)	124	138	138

Machines compatibility			
All-Tach®	N757036	N757037	N51502499
2600 R	-	-	X
2700 V NXT:2	X	X	-

HIGH PRESSURE CLEANER

- Tank capacity of 600 l.
- Hydraulic powered water pump.
- Pressure regulation from 10 to 200 bars.
- Manometer on standard.
- Nozzle spray with a 40 m hose.
- Powerful and efficient cleaning.
- 45 min of autonomy at 200 bars.
- Suitable for all types of cleaning applications and maintenances works.
- Easy to hitch with a standard forks.

	VHPC 600
Heaped Capacity (l)	600
Overall height (mm)	1520
Width (mm)	1451
Length (mm)	1115
Overall weight (kg)	240
Cable length (mm)	400
Machine Equipement	+

Machines compatibility	
Reference number	**790335**
MLT 630-105 ST4	X
MLT 630-105 V CP ST4	X
MLT 630-105 V ST4	X
MLT 730-115 V CP ST4	X
MLT 737-130 PS+ ST4	X
MLT 840-145 PS+	X
MLT 841-145 PS+	X
MLT 1040-145 PS+ L	X
MLT 1041-145 PS+L	X
MLT-X 625-75 H	X
MLT-X 735 T LSU	X
MLT-X 737-130 PS+	X
MLT-X 840-140 PS+	X
MLT-X 841 - 145 PS+	X
MLT-X 1040-140 PS+ L	X
MLT-X 1041-145 PS+L	X

MANDATORY MACHINE EQUIPMENT: +

PICKUP SWEEPER

- Floating frame which avoids any squashing the attachment when driving on the bumpy road.
- ø 230 mm side brush in polyester and galvanized steel.
- Synchronisation valve: sweep and control the dirt tank with 1 single hydraulic function.
- Pressure limiter for powerful machine.
- Brush ø 600 mm.
- 4x ø 200 mm heavy duty wheels.
- Recommended option: continuous hydraulic flow.
- High output attachment for the most demanding applications.
- Sweep and pick-up in one operation.
- Up to 2500 m² cleaned in 10 minutes.
- High quality sweeping on uneven ground.
- Interchangeable side brush (right or left) for a perfect sweeping along wall and sidewalks.

	BRB 1600	BRB 2200	BRB 2500
Heaped Capacity (l)	380	530	600
Overall height (mm)	1068	1068	1068
Width (mm)	2000	2600	2900
Length (mm)	2370	2370	2370
Overall weight (kg)	775	925	1000
Machine Equipement	+	+	+

Machines compatibility			
Reference number	**790313**	**790315**	**790316**
MLT 625-75 H	X	-	-
MLT 737-130 PS+ ST4	-	X	-
MLT 840-145 PS+	-	X	-
MLT 841-145 PS+	-	X	-
MLT 961-145 V+ L	-	X	X
MLT 961-160 V+ L	-	X	-
MLT 1041-145 PS+L	-	X	-
MLT-X 625-75 H	X	-	-
MLT-X 735 T LSU	-	X	-
MLT-X 737-130 PS+	-	X	-
MLT-X 840-140 PS+	-	X	-
MLT-X 841 - 145 PS+	-	X	-
MLT-X 961-145 V+ L	-	X	X
MLT-X 961-160 V+ L	-	X	-
MLT-X 1041-145 PS+L	-	X	-
MT 625 HA	X	-	-
MT-X 625 H	X	-	-

MANDATORY MACHINE EQUIPMENT: +

SWEEPER 2 IN 1

- Protected hydraulic system, no hydraulic backline required.
- Synchronisation valve: sweep and control the dirt tank with 1 single hydraulic function.
- Galvanized structure for more longevity.
- Synthetic brush ø520 mm.
- Optional side brush ø320 mm.
- Standard version: standard wheel, mechanical swivel.
- "+" version: reinforced wheels, mechanical swivel.
- "HWA +" version: reinforced wheels, hydraulic swivel, water sprayer (120 L).
- MLA, MRT limitation : External temperature < 33°C | usage < 2 hours a day.
- Simple & efficient solution for all light and medium duty applications.
- Dust collector & front wheel standard.
- 2 in 1: sweeper-collector & side-pushing sweeper.
- Fast, toolless switching from one configuration to the other.

	SCC 2050	SCC 2050 +	SCC 2050 HWA +	SCC 2600	SCC 2600 +	SCC 2600 HWA +
Heaped Capacity (l)	200	200	200	250	250	250
Overall height (mm)	950	950	1550	950	950	1550
Width (mm)	2270	2270	2270	2820	2820	2820
Length (mm)	2140	2170	2170	2140	2170	2170
Overall weight (kg)	630	640	690	755	730	800
Machine Equipement						
Water sprayer and hydraulic swivel	No	-	Yes	-	-	Yes
Rotation 1	30	30	30	30	30	30

Machines compatibility						
Reference number	52000514	52000516	52000518	52000515	52000517	52000519
MLT 625-75 H	X	X	X	-	-	-
MLT 630-105 ST4	-	-	-	X	X	X
MLT 630-105 V CP ST4	-	-	-	X	X	X
MLT 630-105 V ST4	-	-	-	X	X	X
MLT 730-115 V CP ST4	-	-	-	X	X	X
MLT 733-115 ST4	-	-	-	X	X	X
MLT 737-130 PS+ ST4	-	-	-	X	X	X
MLT 840-145 PS+	-	-	-	X	X	X
MLT 841-145 PS+	-	-	-	X	X	X
MLT 961-145 V+ L	-	-	-	X	-	X
MLT 961-160 V+ L	-	-	-	X	-	X
MLT 1040-145 PS+ L	-	-	-	X	X	X
MLT 1041-145 PS+L	-	-	-	X	X	X
MLT-X 625-75 H	X	X	X	-	-	-
MLT-X 732	-	-	-	X	X	X
MLT-X 735 T LSU	-	-	-	X	X	X
MLT-X 737-130 PS+	-	-	-	X	X	X
MLT-X 840-140 PS+	-	-	-	X	X	X
MLT-X 841 - 145 PS+	-	-	-	X	X	X
MLT-X 961-145 V+ L	-	-	-	X	-	X
MLT-X 961-160 V+ L	-	-	-	X	-	X
MLT-X 1040-140 PS+ L	-	-	-	X	X	X
MLT-X 1041-145 PS+L	-	-	-	X	X	X
MRT 1440 Easy T4 S2 400°	-	-	-	-	X	-
MRT 1640 Easy T4 S2 360°	-	-	-	-	X	-
MRT 1640 Easy T4 S2 400°	-	-	-	-	X	-
MRT 1645 75	-	-	-	-	X	-
MRT 1645 115	-	-	-	-	X	-
MRT 1840 Easy T4 S2 360°	-	-	-	-	X	-
MRT 1840 Easy T4 S2 400°	-	-	-	-	X	-
MRT 1845 75	-	-	-	-	X	-
MRT 1845 115	-	-	-	-	X	-
MRT 2145 115	-	-	-	-	X	-
MRT 2145 Easy T4 S2 360°	-	-	-	-	X	-
MRT 2145 Easy T4 S2 400°	-	-	-	-	X	-

	SCC 2050	SCC 2050 +	SCC 2050 HWA +	SCC 2600	SCC 2600 +	SCC 2600 HWA +
Machines compatibility						
MRT 2545 115	-	-	-	-	X	-
MRT 2545 Easy T4 S2 360°	-	-	-	-	X	-
MRT 2545 Easy T4 S2 400°	-	-	-	-	X	-
MRT-X 1440 Easy 400°	-	-	-	-	X	-
MRT-X 1640 Easy 360°	-	-	-	-	X	-
MRT-X 1640 Easy 400°	-	-	-	-	X	-
MRT-X 1645	-	-	-	-	X	-
MRT-X 1840 Easy 360°	-	-	-	-	X	-
MRT-X 1840 Easy 400°	-	-	-	-	X	-
MRT-X 1845	-	-	-	-	X	-
MRT-X 2145	-	-	-	-	X	-
MRT-X 2145 Easy 360°	-	-	-	-	X	-
MRT-X 2145 Easy 400°	-	-	-	-	X	-
MRT-X 2545	-	-	-	-	X	-
MRT-X 2545 Easy 360°	-	-	-	-	X	-
MRT-X 2545 Easy 400°	-	-	-	-	X	-
MT 420 H	X	X	X	-	-	-
MT 625 HA	X	X	X	-	-	-
MT 733 Easy	-	X	X	X	X	-
MT 933 Easy	-	-	-	X	X	X
MT 1033 easy	-	-	-	X	X	X
MT 1135	X	X	X	X	X	X
MT 1135 H easy ST5	X	-	X	X	X	X
MT 1335	X	X	X	X	X	X
MT-X 625 H	X	X	X	-	-	-
MT-X 733	-	-	-	X	X	X
MT-X 1033	-	X	X	X	X	X

MANDATORY MACHINE EQUIPMENT:

WINCH RANGE

Range

274 Heavy Duty Hydraulic Winch
276 Hydraulic Winch
280 Variowinch

HEAVY DUTY HYDRAULIC WINCH

- Hydraulic motor+ end of cable automatic movement stop.
- Oil immersed negative break.
- Double or quadruple line pull (according to type).
- Homologated swivel self locking hook.
- Winch strorage stand with sleeves for fork handling.
- Note: dimensions below are given for winch placed on its stands.
- Turns your telehandler into a crane.
- Estremely fast implementation on the MANITOU carriage.
- Easy steering from the cab or with the machine's remote control (optional).
- Fast and accurate movements.

	Winch 9 T	Winch 13T	Winch 18T	Winch 23T
Max. outreach (mm)	532	682	722	722
Working height (mm)	14000	14000	14000	14000
Capacity (kg)	9000	13000	18000	23000
Overall height (mm)	2366	2328	2363	2363
Width (mm)	1250	1250	1250	1250
Depth (mm)	975	975	1043	1044
Overall weight (kg)	850	1185	1550	1550
Cable length (mm)	30000	60000	60000	60000
Cable loop	1	2	2	2
Machine Equipement	+	+	+	+
Hook Speed (m/mn)	22.50	15	12	12

Machines compatibility				
Reference number E-RECO	939030	939234	939328	939329
MHT 790	X	-	-	-
MHT 10130	-	X	-	-
MHT 10180	-	-	X	-
MHT 10230	-	-	-	X
MHT 12330	-	-	-	X
MHT-X 790	X	-	-	-
MHT-X 10130	-	X	-	-
MHT-X 10180	-	-	X	-
MHT-X 10230	-	-	-	X
MHT-X 12330	-	-	-	X

MANDATORY MACHINE EQUIPMENT: +

HYDRAULIC WINCH

- Hydraulic motor + end of cable automatic movement stop.
- Oil immersed negative break.
- Double or quadruple line pull (according to type).
- Homologated swivel self locking hook.
- Winch strorage stand with sleeves for fork handling.
- Note: dimensions below are given for winch placed on its stands.
- MRT Vision+ : Significant hook speed increase through machine/attachment cooperation improvement.
- Turns your telehandler into a crane.
- Estremely fast implementation on the MANITOU carriage.
- Easy steering from the cab or with the machine's remote control (optional).
- Fast and accurate movements.

	W 3000 / 23M	W 3000 / 36M	W 3000 DI / 46M	W 6000 / 25M	W 6000 / 32M	Winch 3T
Max. outreach (mm)	519	515	689	-	-	519
Working height (mm)	24000	33000	46000	-	-	24000
Capacity (kg)	3000	3000	3000	6000	6000	3000
Overall length (mm)	900	900	900	-	-	900
Overall height (mm)	1869	1869	1869	-	-	1869
Width (mm)	1080	1080	1080	-	-	1080
Depth (mm)	763	763	839	838	838	763
Overall weight (kg)	395	320	480	420	450	310
Cable length (mm)	49000	70000	48000	51000	67000	49000
Cable loop	1	1	Direct	1	1	1
Machine Equipement		-	-	-	-	
Working height/open attachment (mm)	24000	33000	46000	25000	32000	24000
Hook Speed (m/mn)	24	24	48	-	-	24

Machines compatibility						
Reference number	-	-	-	-	-	885236
Reference number E-RECO	52718245	52717650	52717900	52717140	52717351	-
Reference number E-RECO 2	-	-	-	-	-	-
MRT 1440 Easy T4 S2 400°	-	-	-	-	-	X
MRT 1640 Easy T4 S2 360°	-	-	-	-	-	X
MRT 1840 Easy T4 S2 360°	-	-	-	-	-	X
MRT 1840 Easy T4 S2 400°	-	-	-	-	-	X
MRT 2145 Easy T4 S2 360°	-	-	-	-	-	X
MRT 2145 Easy T4 S2 400°	-	-	-	-	-	X
MRT 2150 Privilege Plus	-	-	-	-	-	X
MRT 2260	X	X	X	X	X	-
MRT 2470 Privilege Plus	-	-	-	-	-	X
MRT 2545 Easy T4 S2 360°	-	-	-	-	-	X
MRT 2545 Easy T4 S2 400°	-	-	-	-	-	X
MRT 2550 Privilege Plus	-	-	-	-	-	X
MRT 2570	-	X	X	X	X	-
MRT 2660	-	X	X	-	X	-
MRT 3060	-	X	X	-	X	-
MRT 3570	-	X	X	-	X	-
MRT 3570 ES	-	X	X	-	X	-
MRT-X 1640 Easy 360°	-	-	-	-	-	X
MRT-X 1640 Easy 400°	-	-	-	-	-	X
MRT-X 1840 Easy 360°	-	-	-	-	-	X
MRT-X 1840 Easy 400°	-	-	-	-	-	X
MRT-X 2150 Privilege Plus	-	-	-	-	-	X
MRT-X 2260	X	X	X	X	X	-
MRT-X 2470 Privilege Plus	-	-	-	-	-	X
MRT-X 2545 Easy 360°	-	-	-	-	-	X
MRT-X 2545 Easy 400°	-	-	-	-	-	X
MRT-X 2550 Privilege Plus	-	-	-	-	-	X
MRT-X 2570	-	X	X	X	X	-

	W 3000 / 23M	W 3000 / 36M	W 3000 DI / 46M	W 6000 / 25M	W 6000 / 32M	Winch 3T
Machines compatibility						
MRT-X 2660	-	X	X	-	X	-
MRT-X 3060	-	X	X	-	X	-
MRT-X 3570	-	X	X	-	X	-
MRT-X 3570 ES	-	X	X	-	X	-
MT 1135	-	-	-	-	-	X
MT 1135 H easy ST5	-	-	-	-	-	X
MT 1335	-	-	-	-	-	X
MT 1440	-	-	-	-	-	X
MT 1440 A	-	-	-	-	-	X
MT 1440 HA	-	-	-	-	-	X
MT 1840	-	-	-	-	-	X
MT 1840 A	-	-	-	-	-	X
MT 1840 HA	-	-	-	-	-	X
MT-X 1440	-	-	-	-	-	X
MT-X 1440 A	-	-	-	-	-	X
MT-X 1840	-	-	-	-	-	X
MT-X 1840 A	-	-	-	-	-	X

MANDATORY MACHINE EQUIPMENT: +

	Winch 3T MRT	Winch 3T TD	Winch 4T	Winch 5T	Winch 5T (b)	Winch 7.2T
Max. outreach (mm)	515	689	541	541	541	238
Working height (mm)	33000	46000	24000	24000	24000	36000
Capacity (kg)	3000	3000	4000	5000	5000	7200
Overall length (mm)	900	900	900	900	900	1200
Overall height (mm)	1869	1869	1869	1869	1869	2408
Width (mm)	1080	1080	1080	1080	1080	1223
Depth (mm)	763	839	838	838	838	638
Overall weight (kg)	320	480	420	420	450	700
Cable length (mm)	70000	48000	51000	51000	51000	76000
Cable loop	1	Direct	1	1	-	1
Machine Equipement					-	
Working height/open attachment (mm)	33000	46000	24000	24000	24000	36000
Hook Speed (m/mn)	24	48	21.50	21.50	21.50	19.40

Machines compatibility						
Reference number	-	-	-	-	-	-
Reference number E-RECO	939393	939111	921338	921341	939109	934500
Reference number E-RECO 2	-	-	-	-	-	53027311
MRT 1640 Easy T4 S2 360°	-	X	X	-	-	-
MRT 1840 Easy T4 S2 360°	-	X	X	-	-	-
MRT 1840 Easy T4 S2 400°	-	X	X	-	-	-
MRT 2145 Easy T4 S2 360°	-	X	X	X	-	-
MRT 2145 Easy T4 S2 400°	-	X	X	X	-	-
MRT 2150 Privilege Plus	-	-	X	X	-	-
MRT 2470 Privilege Plus	-	-	-	X	-	X
MRT 2545 Easy 3B S2 360°	-	-	-	X	-	-
MRT 2545 Easy T4 S2 360°	-	X	X	X	-	-
MRT 2545 Easy T4 S2 400°	-	X	X	-	-	-
MRT 2550 Privilege Plus	-	-	X	X	-	-
MRT 3050 Privilege Plus	X	X	-	X	X	-
MRT 3255 Privilege Plus	X	X	-	X	X	X
MRT-X 1440 Easy 400°	-	X	X	-	-	-
MRT-X 1640 Easy 360°	-	X	X	-	-	-
MRT-X 1640 Easy 400°	-	X	X	-	-	-
MRT-X 1840 Easy 360°	-	X	X	-	-	-
MRT-X 1840 Easy 400°	-	X	X	-	-	-
MRT-X 2145 Easy 360°	-	X	X	-	-	-
MRT-X 2145 Easy 400°	-	X	X	-	-	-
MRT-X 2150 Privilege Plus	-	-	X	X	-	-
MRT-X 2470 Privilege Plus	-	-	-	X	-	X
MRT-X 2545 Easy 360°	-	X	X	X	-	-
MRT-X 2545 Easy 400°	-	X	X	X	-	-
MRT-X 2550 Privilege Plus	-	-	X	X	-	-
MRT-X 3050 Privilege Plus	X	X	-	X	X	-
MRT-X 3255 Privilege Plus	X	X	-	X	X	X

MANDATORY MACHINE EQUIPMENT: +

VARIOWINCH

- Hydraulic motor + end of cable automatic movement stop.
- Oil immersed negative break.
- Patented variable speed concept.
- Autonomous, 100% hydraulic speed adaptation to load.
- Homologated swivel self locking hook.
- Winch strorage stand with sleeves for yard handling.
- Note: dimensions below are given for winch placed on its stands ; working weight: 700kg.
- MRT Vision+ : significant hook speed increase through machine/attachment cooperation improvement.
- Turns your telehandler into a crane.
- 4x faster than a standard Manitou 5t winch / 3x faster than a 3t one.
- Speed is continuously adapted to the load & operator's speed requirement.
- Max. speed 60m/min (MRT 3255, no load, lifting).
- Easy steering from the cab or with the machine's remote control (optional).

	VARIOWINCH 7.2 t
Max. outreach (mm)	638
Working height (mm)	36000
Capacity (kg)	7200
Overall length (mm)	1200
Overall height (mm)	2408
Width (mm)	1223
Depth (mm)	638
Overall weight (kg)	700
Cable length (mm)	76000
Cable loop	1
Machine Equipement	+
Working height/open attachment (mm)	36000
Hook Speed (m/mn)	60.60

Machines compatibility	
Reference number E-RECO	**52576737**
Reference number E-RECO 2	**52705674**
MRT 1440 Easy T4 S2 400°	X
MRT 1640 Easy T4 S2 400°	X
MRT 2150 Privilege Plus	X
MRT 2260	X
MRT 2470 Privilege Plus	X
MRT 2550 Privilege Plus	X
MRT 2570	X
MRT 2660	X
MRT 3050 Privilege Plus	X
MRT 3060	X
MRT 3255 Privilege Plus	X
MRT 3570	X
MRT 3570 ES	X
MRT-X 1440 Easy 400°	X
MRT-X 1640 Easy 360°	X
MRT-X 1640 Easy 400°	X
MRT-X 1840 Easy 360°	X
MRT-X 1840 Easy 400°	X
MRT-X 2150 Privilege Plus	X
MRT-X 2260	X
MRT-X 2470 Privilege Plus	X
MRT-X 2545 Easy 360°	X
MRT-X 2545 Easy 400°	X
MRT-X 2550 Privilege Plus	X
MRT-X 2570	X
MRT-X 2660	X
MRT-X 3050 Privilege Plus	X
MRT-X 3060	X
MRT-X 3255 Privilege Plus	X

	VARIOWINCH 7.2 t
Machines compatibility	
MRT-X 3570	X
MRT-X 3570 ES	X

MANDATORY MACHINE EQUIPMENT: +

MINING SOLUTIONS

Range

284 Cylinder Handler
286 Pipe Handler
288 Slim Tyre Handler
290 Tunneling Platform
293 Tyre Handler
295 Underground Mining Platform

CYLINDER HANDLER

- For cylinders with diameter from 0 mm to 630 mm.
- Maximum capacity up to 10500 kg.
- Cylinder holding with cables (CH 4) or clamps (CH 10).
- Hydraulic movements: body rotation, side shift.
- CH4: Body rotation 22.5°, side shift 150 mm, hydraulic telescopic extension, hydraulic side body tilt 15°/15°, head rotation 35°.
- CH10: body rotation 340°, head vertical tilt 90°.
- CH10: clamping pressure alarm & pressure gauge on each front & side.
- Clamp reduction pads for smaller cylinders.
- Efficient & safe cylinder handling solutions.
- Faster, safer maintenance leading to less production losses.
- Robust conception designed for mining sites conditions.
- Safety & Productivity: smooth and accurate cylinder catching and positioning.
- Permanent cylinder grip: no suspended load, no risk of sudden slippage or fall.
- As functional as a human wrist.

	CH 4	CH 10
Max. outreach (mm)	2221	-
Capacity (kg)	4000	10500
Capacity 2 (kg)	2000	-
Max @ outreach 2 (mm)	3106	-
Overall height (mm)	1360	1195
Width (mm)	1470	1780
Length (mm)	2249	2525
Overall weight (kg)	1850	3500
Diameter minimum / Diameter maximum (mm)	250 / 530	230 / 640
Arm length (mm)	1500	-
Machine Equipement	+	+ +
Hydraulic system	Yes	Yes
Side shift (mm)	150	300
Teeth	1850	3500
Rotation 1	22.5	340
Rotation 2	35	90

Machines compatibility		
Reference number	**906450**	**-**
Reference number E-RECO	**911968**	**939239**
Reference number E-RECO 2	**52623065**	**-**
MHT 790	X	-
MHT 10130	X	X
MHT 10180	X	X
MHT 10230	X	X
MHT-X 790	X	-
MHT-X 860 S2	X	-
MHT-X 10130	X	X
MHT-X 10180	X	X
MHT-X 10230	X	X
MT-X 1840 A	X	-

MANDATORY MACHINE EQUIPMENT: +

PIPE HANDLER

- Maximum capacity 14000 kg / 30865 lbs.
- Max. pipe diameter 1016 mm / 40”.
- Increased component protection for less downtimes.
- Complete grapple opening, increased efficiency when loading palletized loads.
- Rubber-covered tine pads.
- Fork dimensions: 120 x 240 x 2400 mm / 4.7 x 9.4 x 94.5”.
- Thinner forks (90 mm) available upon request.
- Forks can be used in floating or fixed mode.
- Increases working safety & output on all pipe-handling applications.
- Perfect upholding of pipes thanks to its mobile grapple with hydraulic tine pads- increased safety on rough terrain.
- “Appendix” at the end of the grapple, ensures complete closing & prevents the pipes from sliding away.
- Separated control of grapple & tine pads for more accuracy.
- Increased polyvalence: can be used to handle other loads.

	PH 2100 / 8000	PH 2500 / 14000
Capacity (kg)	8000	14000
Forks width X Forks length X Forks section (mm)	1500	240 X 2400 X 120
Overall height (mm)	-	1950
Opened grab height (mm)	-	4699
Closed grab height (mm)	-	1950
Width (mm)	2115	2440
Length (mm)	-	2865000
Overall weight (kg)	2170	3800
Diameter minimum / Diameter maximum (mm)	0 / 830	0 / 1016
Machine Equipement	-	+
Hydraulic system	Yes	Yes
Opening minimum (mm)	-	0
Opening maximum (mm)	-	4579

Machines compatibility		
Reference number E-RECO	**939231**	**939332**
Reference E-RECO (non-standard)	**-**	**52623065**
MHT 790	-	X
MHT 10130	X	X
MHT 10180	-	X
MHT 10230	-	X
MHT 12330	-	X
MHT-X 790	-	X
MHT-X 10130	X	X
MHT-X 10180	-	X
MHT-X 10230	-	X
MHT-X 12330	-	X

MANDATORY MACHINE EQUIPMENT:

SLIM TYRE HANDLER

- Maximum capacity up to 2900 kg/6939 lbs.
- Clamping with forks, 93mm thin.
- Accept a wide variety of tyre diameters.
- Compact design, centre of gravity stays close to the telehandler.
- Body rotation : ± 360°.
- Constant side shift : ± 100 mm.
- Control: from cab or remote control (MHT).
- A compact solution for all limited-access tyre removal operations.
- Fork-based concept (2 pairs of forks), suitable for underground mining trucks.
- Perfect tyre holding, fork covered with anti-slip material.
- Available on several telehandler types.
- Limited machine downtime.

	TH 33 / 2000 S	TH 35 / 2900 S
Capacity (kg)	2000	2900
Forks section (mm)	93	107
Overall height (mm)	926	916
Width (mm)	1360	1650
Length (mm)	1743	1841
Overall weight (kg)	1160	1320
Diameter minimum / Diameter maximum (mm)	480 / 2100	650 / 2650
Arm length (mm)	1149	1199
Hydraulic system	Yes	Yes
Side shift (mm)	100	100
Teeth	4	4
Forks	4	4
Opening minimum (mm)	470	690
Opening maximum (mm)	2120	2650
Rotation 1	360	360

Machines compatibility		
Reference number E-RECO	939039	939040
MHT 790	X	X
MHT-X 860 S2	X	X
MLT 845-100 H	X	X
MLT 845-120	X	X
MLT-X 845-120	X	X
MLT-X 845-120 H	X	X

MANDATORY MACHINE EQUIPMENT:

TUNNELING PLATFORM

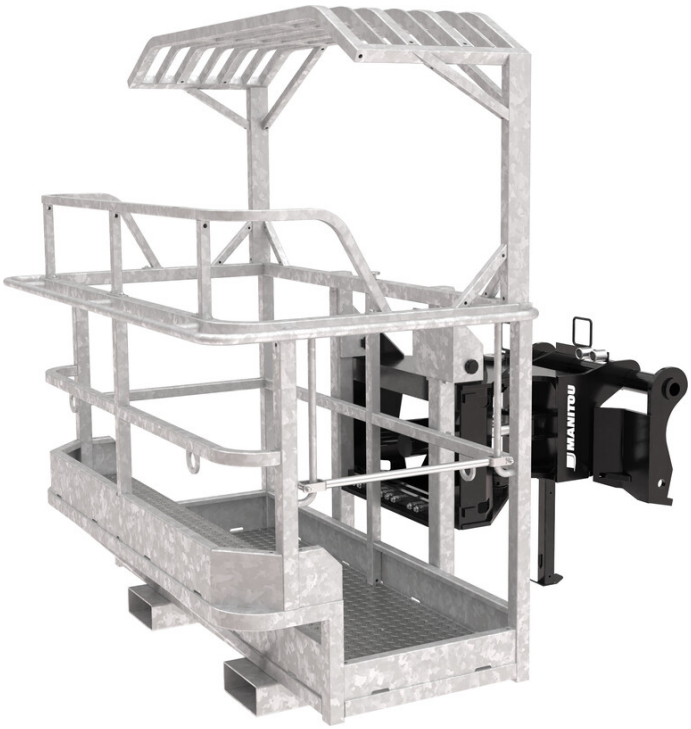

- Platform fitted with a FOPS-TYPE roof (lenght: 580mm / full platform width / 1930 mm under the roof).
- Protected elevated position (+ 300 mm).
- Capacity 1000 kg.
- Rotation 90° on both sides.
- Access: sliding bar on one side.
- Fork sleeves for yard handling.
- Maximum protection for tunneling applications
- No unsafe climbing on the platform required to work above the FOPS roof.
- To use heavy tools in the platform.
- No compromise on safety: EN 280 compliant.

	GALLERY PLATFORM	PST 1800 / 1000 3P FOPS1
Capacity (kg)	1000	1000
Capacity including people (kg)	-	3
Number of people	3	-
Overall height (mm)	2125	-
Width (mm)	1990	1990
Length (mm)	2175	-
Depth (mm)	1000	-
Overall weight (kg)	730	730
Machine Equipement		
Rotation 1	180	180

Machines compatibility		
Reference number	**52574289**	**-**
Reference number E-RECO	**921356**	**52719262**
MHT 790	X	-
MHT-X 790	X	-
MRT 1440 Easy T4 S2 400°	X	-
MRT 1640 Easy T4 S2 360°	X	-
MRT 1640 Easy T4 S2 400°	X	-
MRT 1645 75	-	X
MRT 1645 115	-	X
MRT 1840 Easy T4 S2 360°	X	-
MRT 1840 Easy T4 S2 400°	X	-
MRT 1845 75	-	X
MRT 1845 115	-	X
MRT 2145 115	-	X
MRT 2145 Easy 3B S2 400°	X	-
MRT 2145 Easy T4 S2 360°	X	-
MRT 2145 Easy T4 S2 400°	X	-
MRT 2150 Privilege Plus	X	-
MRT 2260	-	X
MRT 2470 Privilege Plus	X	-
MRT 2545 115	-	X
MRT 2545 Easy T4 S2 360°	X	-
MRT 2545 Easy T4 S2 400°	X	-
MRT 2550 Privilege Plus	X	-
MRT 2570	-	X
MRT 2660	-	X
MRT 3050 Privilege Plus	X	-
MRT 3060	-	X
MRT 3570	-	X
MRT 3570 ES	-	X
MRT-X 1440 Easy 400°	X	-
MRT-X 1640 Easy 360°	X	-
MRT-X 1640 Easy 400°	X	-
MRT-X 1645	-	X

	GALLERY PLATFORM	PST 1800 / 1000 3P FOPS1
Machines compatibility		
MRT-X 1840 Easy 360°	X	-
MRT-X 1840 Easy 400°	X	-
MRT-X 1845	-	X
MRT-X 2145	-	X
MRT-X 2145 Easy 360°	X	-
MRT-X 2145 Easy 400°	X	-
MRT-X 2150 Privilege Plus	X	-
MRT-X 2260	-	X
MRT-X 2470 Privilege Plus	X	-
MRT-X 2545	-	X
MRT-X 2545 Easy 360°	X	-
MRT-X 2545 Easy 400°	X	-
MRT-X 2550 Privilege Plus	X	-
MRT-X 2570	-	X
MRT-X 2660	-	X
MRT-X 3050 Privilege Plus	X	-
MRT-X 3060	-	X
MRT-X 3570	-	X
MRT-X 3570 ES	-	X

TYRE HANDLER

- Safe solution for tyre removal in mining environments.
- Complex hydraulic movements: body rotation, pad rotation, side shift+ machine tilt & telescope extension.
- Safety: anti-fall arms.
- Telescopic (TH 49) or parallelogram kinematics (all other clamps).
- Controlled from the cab or with a remote control.
- Safety: each movement activated by 2 operator actions (button + joystick).
- TH 49/ 2500: 1 left pad active, right pad passive.
- Tyre changes made fast & safe.
- Significant improvement in tyre changing operations.
- No compromise with safety.
- As mobile as a human wrist.
- Wide range of diametres & capacities to suit all dump truck.
- Available on a wide range of machines.

	TH 49 / 2500	TH 51 / 3500	TH 57 / 6000**	TH 63 / 12000**
Max. outreach (mm)	1903	2251	2683	3493
Capacity (kg)	2500	3500	6000	12000
Overall height (mm)	1050	-	4300	1229
Width (mm)	1951	2400	2500	3224
Length (mm)	2208	2990	3378	3752
Depth (mm)	1214	2251	2683	2333
Overall weight (kg)	1500	3300	4300	5260
Diameter minimum / Diameter maximum (mm)	1200 / 3100	1200 / 3400	1300 / 3800	600 / 4200
Hydraulic system	Yes	Yes	Yes	Yes
Side shift (mm)	200	150	300	300
Opening minimum (mm)	1146	1128	1218	549
Opening maximum (mm)	3146	3416	3831	4286
Rotation 1	20	35	172	172
Rotation 2	120	120	360	360

Machines compatibility				
Reference number	**914600**	**884898**	**-**	**-**
Reference number E-RECO	**914600**	**911969**	**939237**	**939331**
MHT 790	X	X	-	-
MHT 10130	-	X	X	-
MHT 10180	-	-	X	X
MHT 10230	-	-	X	X
MHT-X 790	X	X	-	-
MHT-X 860 S2	X	-	-	-
MHT-X 10130	-	X	X	X
MHT-X 10180	-	-	X	X
MHT-X 10230	-	-	X	-
MLT 845-100 H	X	-	-	-
MLT 845-120	X	-	-	-
MLT-X 845-120	X	-	-	-
MLT-X 845-120 H	X	-	-	-

MANDATORY MACHINE EQUIPMENT: +

UNDERGROUND MINING PLATFORM

- Robust and shielded structure with multiple protective bumpers
- Legaly aproved for 3 people
- Plain floor or meshed floor.

- Lösung für spezifische Anwendungen im Bergbau.
- Maximale Sicherheit beim Heben von Personen.

	Mining fixed basket 2x1,5 ZN 1200kg (Meshed Floor)	Mining fixed basket 2x1,5 ZN 1200kg PF (Plain Floor)
Capacity (kg)	1200	1200
Number of people	3	3
Width (mm)	2000	2000
Overall weight (kg)	1020	1020
Machine Equipement		

Machines compatibility		
Reference number	**914730**	**939701**
Reference number E-RECO	**939052**	**-**
Reference number E-RECO 2	**939243**	**939244**
Reference E-RECO 2 (non-standard)	**52623065**	**-**
MHT 790	X	-
MHT 10130	X	X
MHT 10180	X	X
MHT 10230	X	X
MHT 12330	X	-

MANDATORY MACHINE EQUIPMENT:

EARTH DRILLING AND DIGGING SOLUTIONS

Range

298 Hydraulic hammer (Compact machines)

MANITOU GROUP | ATTACHMENTS

HYDRAULIC HAMMER (COMPACT MACHINES)

- High resistance, frame and hydraulics.
- High impact frequency and stroke power.
- Turns your machine into a real demolition unit.
- Silent version standard.

	H 88	H 90	H 160	H 162	H 240	H 330	H 570
Overall height (mm)	773	773	932	932	1016	1112	1288
Overall weight (kg)	88	88	162	162	236	330	568
Diameter minimum (mm)	-	47.90	53.70	-	67.50	77.50	81.50
Hydraulic requirement standard (l/min)	32	32	50	50	85	95	110

Machines compatibility							
Earth drilling and digging solutions references	H 88	H 90	H 160	H 162	H 240	H 330	H 570
All-Tach® Narrow	N51502209	-	-	N51502210	-	-	-
All-Tach®	-	N51502209	N51502210	-	N51502211	N51502212	N51502214
850 R	-	X	-	-	-	-	-
1050 R	-	X	X	-	-	-	-
1350 R NXT2	-	X	X	-	-	-	-
1500 R NXT2	-	-	X	-	X	-	-
1650 R	-	-	X	-	X	-	-
1900 R	-	-	X	-	X	-	-
2200 R	-	-	-	-	X	X	-
2600 R	-	-	-	-	X	X	-
2700 V NXT:2	-	-	-	-	X	X	-
3300 V NXT:2	-	-	-	-	X	X	-
4200 V	-	-	-	-	-	X	X
MLA 3-35 H	X	-	-	X	-	-	-
MLA 4-50 H	X	-	-	X	-	-	-

SNOW REMOVING SOLUTIONS

Range

301 Snow blade (Compact machines)

304 Snow blower (Compact machines)

MANITOU GROUP | ATTACHMENTS

SNOW BLADE (COMPACT MACHINES)

- 30° hydraulic orientation, 2 cylinders.
- Strong construction with shock absorber & horizontal self leveling.
- Efficient snow removal in one go.

	BLS 1500	BLS 1500 / 900 (a)	BLS 1500 / 900 (b)	BLS 1650 / 900	BLS 1800	BLS 1800 / 900
Overall height (mm)	700	700	700	700	700	700
Width (mm)	1500	1500	1500	1650	1800	1800
Depth (mm)	900	900	900	900	900	900
Overall weight (kg)	220	220	220	250	280	280
Working width - angled (mm)	1300	-	-	-	1558	-
Hydraulic requirement standard (l/min)	180	-	-	-	180	-

Machines compatibility						
Snow removing solutions references	BLS 1500	BLS 1500 / 900 (a)	BLS 1500 / 900 (b)	BLS 1650 / 900	BLS 1800	BLS 1800 / 900
All-Tach® Narrow	N51502219	-	-	-	-	-
All-Tach®	-	N51502219	N51502220	N51502221	N51502224	N51502224
4 point Carriage	N51502217	-	-	-	N51502222	-
Euro Carriage	N51502218	-	-	-	N51502223	-
850 R	-	X	-	-	-	-
1050 R	-	-	X	X	-	-
1350 R NXT2	-	-	-	-	-	X
1350 RT	-	-	-	-	X	-
MLA 1-25 H	X	-	-	-	-	-
MLA 3-35 H	X	-	-	-	-	-
MLA 4-50 H	-	-	-	-	X	-

	BLS 2100 / 900 (a)	BLS 2100 / 900 (b)	BLS 2400 / 900 (a)	BLS 2400 / 900 (b)	BLS 2700 / 900
Overall height (mm)	700	700	800	800	800
Width (mm)	2100	2100	2400	2400	2700
Depth (mm)	900	900	900	900	900
Overall weight (kg)	350	350	410	410	450
Working width - angled (mm)	-	-	-	-	-
Hydraulic requirement standard (l/min)	-	-	-	-	-

Machines compatibility					
Snow removing solutions references	BLS 2100 / 900 (a)	BLS 2100 / 900 (b)	BLS 2400 / 900 (a)	BLS 2400 / 900 (b)	BLS 2700 / 900
All-Tach® Narrow	-	-	-	-	-
All-Tach®	N51502225	N51502026	N51502227	N51502027	N51502320
4 point Carriage	-	-	-	-	-
Euro Carriage	-	-	-	-	-
1500 R NXT2	X	-	-	-	-
1650 R	X	-	-	-	-
1750 RT NXT:3	-	X	-	-	-
1900 R	X	-	-	-	-
2100 RT NXT:3	-	-	-	X	-
2200 R	X	-	-	-	-
2600 R	-	-	X	-	-
2700 V NXT:2	X	-	-	-	-
3300 V NXT:2	-	-	X	-	-
4200 V	-	-	-	-	X

SNOW BLOWER (COMPACT MACHINES)

- Double stage turbine for more snow clearing efficiency.
- Mechanical adjustable chute orientation.
- Efficient snow removal & perfect surface cleaning in one go.

	SBL 1800	SBL 2100
Diameter 2 (mm)	420	420
Diameter 1 (mm)	450	450
Overall height (mm)	1500	2100
Width (mm)	1800	2100
Overall weight (kg)	480	540
Hydraulic requirement high flow (l/min)	70	70
Hydraulic requirement standard (l/min)	45	45

Machines compatibility		
Snow removing solutions references	SBL 1800	SBL 2100
All-Tach®	N51502228	N51502229
1650 R	X	-
1900 R	X	-
2200 R	-	X
2600 R	-	X
2700 V NXT:2	X	-
3300 V NXT:2	-	X
4200 V	-	X

LEVELLING SOLUTIONS

Range

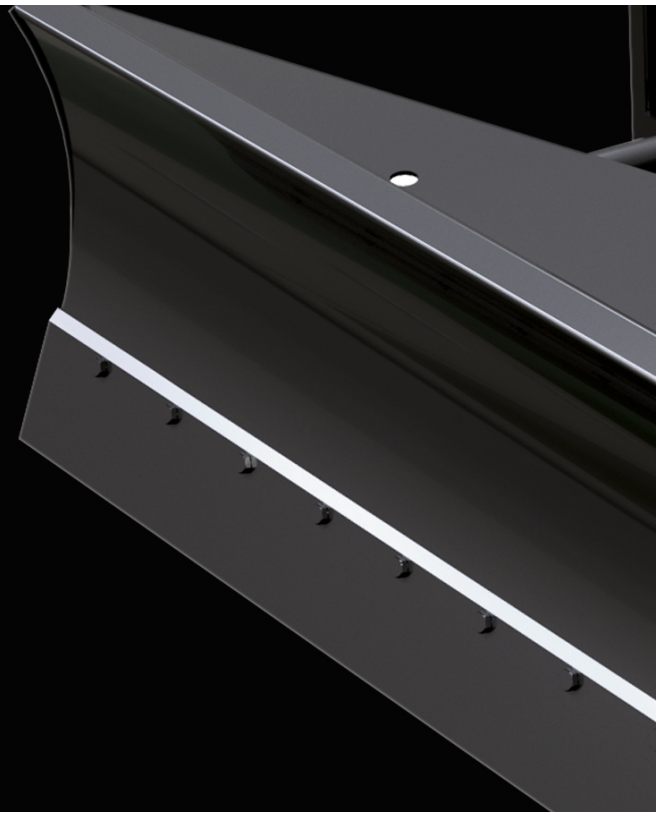

307 Dozer Blade (Compact machines)
309 Dozer Blade - Hydraulic (Compact machines)
312 Dozer Blade - Manual (Compact machines)

DOZER BLADE (COMPACT MACHINES)

- Orientation: mechanical or hydraulic (2 cylinders).
- Bolt-on wear plate.
- For all material pushing applications.

	BLD 1525	BLD 1980	BLD 2135
Overall height (mm)	677	677	677
Width (mm)	1525	1980	2135
Depth (mm)	813	933	933
Overall weight (kg)	240	450	470

Machines compatibility			
Levelling solutions references	**BLD 1525**	**BLD 1980**	**BLD 2135**
All-Tach®	**N700396**	**N51502067**	**N51502068**
4 point Carriage	**N750996**	**-**	**-**
Euro Carriage	**N51502207**	**-**	**-**
1750 RT NXT:3	-	X	-
2100 RT NXT:3	-	X	X
MLA 4-50 H	X	-	-

DOZER BLADE - HYDRAULIC (COMPACT MACHINES)

- User-friendly, continuous hydraulic orientation (2 cylinders).
- Bolt-on wear plate.
- For all material pushing applications.

	BLD 1080 H	BLD 1480 H	BLD 1800 H (a)	BLD 1800 H (b)	BLD 1800 H (c)
Overall height (mm)	977	677	677	677	677
Width (mm)	1080	1480	1800	1800	1800
Depth (mm)	813	813	813	813	813
Overall weight (kg)	195	230	270	270	305

Machines compatibility					
Levelling solutions references	BLD 1080 H	BLD 1480 H	BLD 1800 H (a)	BLD 1800 H (b)	BLD 1800 H (c)
All-Tach®	N726033	N736037	N757043	N51502490	N51502491
850 R	X	-	-	-	-
1050 R	-	X	-	-	-
1350 R NXT2	-	X	-	-	-
1350 RT	-	X	-	-	-
1500 R NXT2	-	-	X	-	-
1650 R	-	-	X	-	-
1900 R	-	-	-	X	-
2200 R	-	-	-	X	-
2600 R	-	-	-	-	X

	BLD 2000 H (a)	BLD 2000 H (b)	BLD 2135 H	BLD 2365 H
Overall height (mm)	677	677	677	677
Width (mm)	2000	2000	2135	2365
Depth (mm)	813	813	813	933
Overall weight (kg)	305	305	470	510

Machines compatibility				
Levelling solutions references	**BLD 2000 H (a)**	**BLD 2000 H (b)**	**BLD 2135 H**	**BLD 2365 H**
All-Tach®	**N757044**	**N51502492**	**N51502085**	**N700264**
2600 R	-	X	-	-
2700 V NXT:2	X	-	-	-
3300 V NXT:2	-	-	X	-
4200 V	-	-	-	X

DOZER BLADE - MANUAL (COMPACT MACHINES)

- Orientation: mechanical or hydraulic (2 cylinders).
- Bolt-on wear plate.
- For all material pushing applications.

	BLD 1080	BLD 1480	BLD 1800 (a)	BLD 1800 (b)	BLD 2000 (a)	BLD 2000 (b)
Overall height (mm)	677	677	677	677	677	677
Width (mm)	1080	1480	1800	1800	2000	2000
Depth (mm)	813	813	813	813	813	813
Overall weight (kg)	135	185	205	205	288	288

Machines compatibility						
Levelling solutions references	BLD 1080	BLD 1480	BLD 1800 (a)	BLD 1800 (b)	BLD 2000 (a)	BLD 2000 (b)
All-Tach®	N726032	N736036	N51502488	N757041	N51502489	N757042
850 R	X	-	-	-	-	-
1050 R	-	X	-	-	-	-
1350 R NXT2	-	X	-	-	-	-
1350 RT	-	X	-	-	-	-
1500 R NXT2	-	-	X	-	-	-
1650 R	-	-	X	-	-	-
1900 R	-	-	-	X	-	-
2200 R	-	-	-	X	-	-
2600 R	-	-	-	X	-	X
2700 V NXT:2	-	-	-	-	X	-

BACKREST, CARRIAGE, INTERFACE REFERENCES

Range

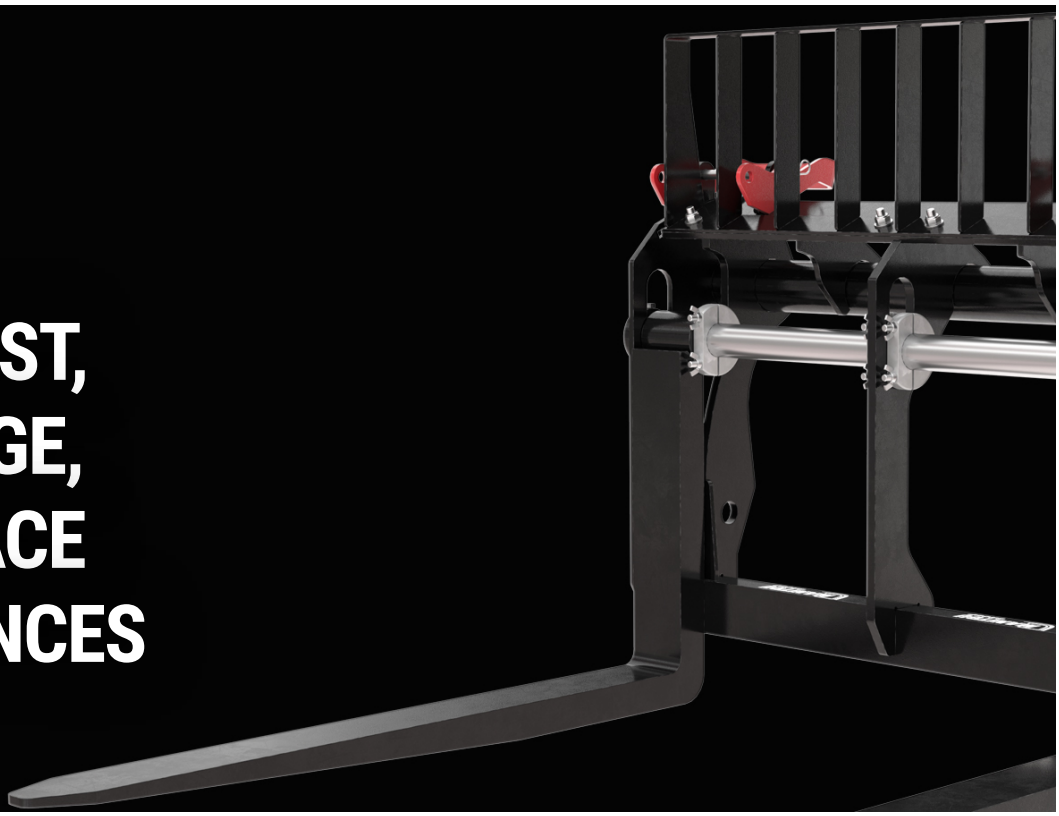

315 Carriage Floating - Forks NEW

NEW

CARRIAGE FLOATING - FORKS

- Lighter version for better performances.
- Better visibility of the load from the cab.
- Folding forks for safe and easy transport on road or trailer.

	CAF 1000 / 3 LB
Capacity (kg)	3000
Forks width X Forks length X Forks section (mm)	100 X 1100 X 50
Overall height (mm)	989
Width (mm)	1002
Length (mm)	1343
Overall weight (kg)	240
Machine Equipement	X
Forks	3
Fork spread minimum (mm)	144
Fork spread maximum (mm)	824

Available fork dimensions
100 x 50 x 1070

Machines compatibility	
Reference number	52654990
MLT 625-75 H	X
MLT-X 625-75 H	X
MT 420 H	X
MT 625 HA	X
MT 730 H	X
MT 930 H	X
MT 930 HA	X
MT-X 420 H	X
MT-X 625 H	X

MANDATORY MACHINE EQUIPMENT: X

MISCELLANEOUS ATTACHMENTS

Range

318 Material Basket NEW

NEW

MATERIAL BASKET

- 1.2m reach and 1000kg capacity.

- Transport and storage facilitated by its foldability.
- Efficient and inexpensive solution for the safe movement of materials in all types of application, environment and meteorology.
- Front opening facilitating pallet loading.

	MB 2000 / 1000
Capacity (kg)	1000
Overall height (mm)	1215
Width (mm)	2056
Length (mm)	1632
Overall weight (kg)	400
Carriage type	Manitou

Machines compatibility	
Reference number	52596600
MT 730 H	X
MT 930 H	X
MT 930 HA	X

MANDATORY MACHINE EQUIPMENT: ╳

E-Reco, an attachment recognition system for greater simplicity.

Manitou is offering, as standard, the attachment recognition system on its new-generation of rotary telescopic trucks MRT.

The system uses RFID radio-identification technology, very widely used in industry and retail. This autonomous technique can remotely recover and record data. The machine detects the attachment at the head of the boom, analyses its data and directly proposes the corresponding working configuration (working envelope + movement speed + safety).

This technology provides the load chart in real time, taking into account the rotation angle of the turret and the position of the machine's stabilisers and in accordance with the mobile crane standard.

TABLE SYMBOL

	No predisposition required
	Hydraulic line
	Return piping to hydraulic oil tank
	Electric predisposition
	Platform predisposition
	Tyre handler, cylinder handler predisposition
	Please contact your Manitou subsidiary (special solution request required)
	Round bale
	Square bale
	Wrapped bale
	Suspended load : read user manual
	Machine equipped with attachment recognition system

Agriculture Construction Industry

NOTES

NOTES

MANITOU GROUP | ATTACHMENTS

Head Office
B.P. 249 - 430 rue de l'Aubinière
44150 Ancenis Cedex - France
Tel: +33 (0)2 40 09 10 11 - Fax: +33 (0)2 40 09 10 97
www.manitou.com

This publication provides a description of the configuration versions and options for Manitou products, which may differ for equipment. The equipment presented in this brochure may be part of a series, as an option, or it may not be available, depending on the versions. Manitou reserves the right, at any time and without notice, to amend the specifications described and represented. The specifications provided do not bind the manufacturer. For more details, please contact your Manitou agent. This is not a contractually binding document. The presentation of the products is not contractually binding. List of specifications non-exhaustive. The logos as well as the visual identity of the company are owned by Manitou and cannot be used without authorisation. All rights reserved. The photos and diagrams contained in this brochure are only provided for consultation and information purposes. MANITOU BF SA – Limited company with board of directors – Share capital: 39 547 824 euros - 857 802 508 RCS Nantes

15_12_2021_14:44_Attachments_attachments_guide_EN